2009 MATE International ROV Competition

Technical Report

PantheROV V

University of Wisconsin – Milwaukee

ROV Team @ UWM

Mentor: Dr. Thomas Consi

Team Member	Major	Year	Expected Graduation
Sam Bingham	Computer Science	Junior	Dec 2010
Trevin Erdmann	Electrical Engineering	Junior	Dec 2010
Spencer Laehn	Mechanical Engineering	Freshman	Dec 2012
Mark Matson	Mechanical Engineering	Senior	Dec 2009
John Ringstad	Mechanical Engineering	Senior	May 2009

Abstract

The goal of this project is to engineer a Remotely Operated Vehicle (ROV) to compete in the 2009 MATE International ROV competition. The vehicle is designed to operate in a submarine rescue fashion, while maintaining the maneuverability and precision actuations of a normal ROV. The vehicle has been designed for the efficient completion of tasks that a rescue ROV may have to perform. These tasks range from surveying the submarine, opening a hatch and inserting emergency supplies, supplying an airline, and providing a transfer skirt for rescue.

PantheROV V is a major redesign of its predecessor PantheROV IV, which competed in the 2008 MATE competition. The major goals were to design a vehicle that was more stable, as well as, excel in sea floor related tasks. PantheROV V has incorporated versatile tracks with heavy gear ratios. These tracks allow for a stable platform for the vehicle in order to provide precision manipulations while decreasing the variable drift to two dimensions rather than three.

The system is controlled by a Rabbit microcontroller "speaking" to a 32 channel servo controller, allowing easy and reliable control of the vehicle from the top-side control computer. The vision for the vehicle consists of two external Ethernet cameras, as well as one internal pan/tilt camera. Object manipulation is performed through a single jointed arm with a servo driven manipulator. A digital compass is also mounted in the front of the vehicle to provide yaw, pitch and roll data.

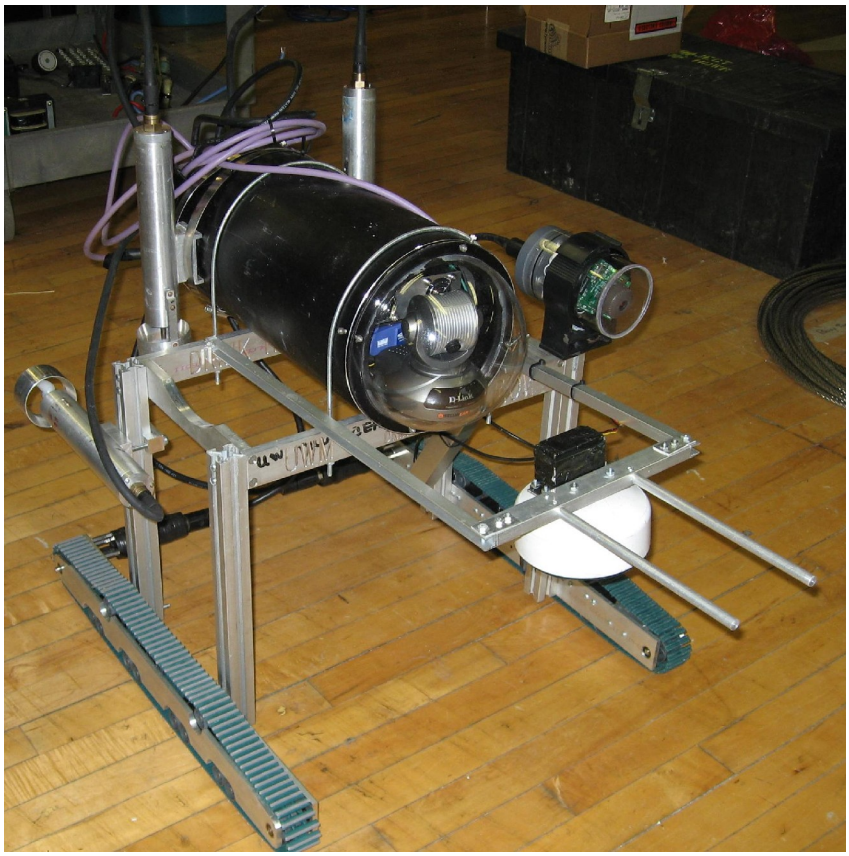

Table of Contents

Abstract ii
Table of Contents iii
1. Vehicle Design Rational
    1.1 Hull and Frame 4
    1.2 Tracks 4
    1.3 Thrusters 6
    1.4 Manipulator 6
    1.5 Vision System 7
2. Electronics
    2.1 Power 8
    2.2 Protection 9
    2.3 Signals 10
3. Software
    3.1 ROV microcontroller (µC) 11
    3.2 Topside interface 12
4. Submarine Rescue 13
5. Troubleshooting 15
6. Lessons Learned 15
7. Reflections 15
8. Challenges 16
9. Future Improvements 16
10. Budget Sheet 17
11. Acknowledgments 18
12. References 19
13. Appendices
    Appendix A: Control Board Schematic 20
    Appendix B: Printed Circuit Board Layout 21

Vehicle Design Rational

1.1 Hull and Frame

PantheROV V is designed with superior corrosion resistant alloys and anodized for further protection. The frame is built using 2.54cm IPS T-6063 aluminum alloy pipe. Speed Rail fittings made from 535 aluminum alloy, one of the most corrosion resistant aluminum alloys, are used as interconnects. Tees, elbows, and double side outlet crosses are needed to create the frame. All of these parts, especially the double side outlet cross, provide modularity and flexibility in mounting external equipment such as cameras, lighting, and thrusters. However, minimal amounts of framing were used to reduce the overall size and weight of the vehicle.

The hull of PantheROV V is a 203.2mm OD, 6.35mm wall thickness anodized aluminum pipe. There are two anodized aluminum end-caps with single o-ring seals. The front end-cap has a silicon sealed acrylic dome for the main pan and tilt camera. The Impulse bulkheads are mounted on the back end-cap. A 3-ring internal frame with an ABS plastic shelf attached centrally allows internal components to be mounted securely.

The vertical thrusters are mounted directly to the pressure hull using stainless steel hose clamps, while the horizontal thrusters are mounted to an aluminum plate which is attached to the tubular frame.

1.2 Thrusters

The goal was to design a small, compact, lightweight thruster to be mounted on PantheROV IV. Aluminum was chosen for the construction of the thruster's pressure can because of its light weight and its availability. The motors which drive the vehicle are Astroflight 801PM-8T Micro Planetary Motors. These motors are brushless motors which have a 4 to 1 gear box attached. They results in high torque while maintaining very small size. The brushless motors also have an advantage in efficiency when compared to standard brushed DC motors (1).

The thruster consists of an aluminum tube (4.44cm in diameter) which serves as a pressure can. There are 2 end caps which complete the can. One end cap contains a thrust bearing and a ball bearing to completely support the shaft, as well as a dynamic shaft seal on the propeller shaft. The propeller shaft is attached to the motor shaft using a shaft coupling with a rubber spider to take up any misalignment of the shafts; this prevents excessive vibration that could deform the seal. The rear end cap of the thruster is where the power and signal enter the thruster through an 8-pin bulkhead connector.

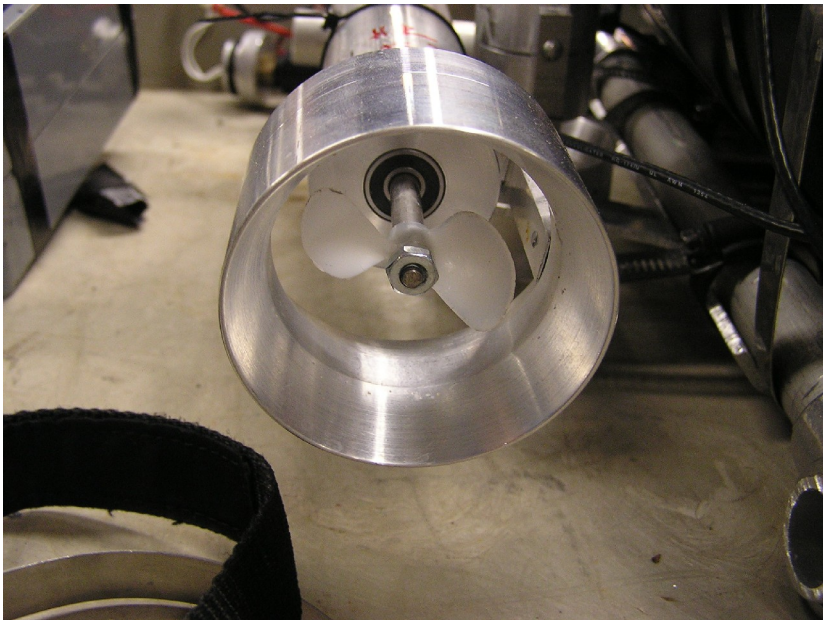

Figure 1 - Prop in Nozzle

Initially many different propellers having different diameters, pitches, and made out of different material were tested. After several unsuccessful attempts at generating thrust with metal propellers, the conclusion was reached that they were too heavy with too high of pitch. A number of plastic and composite props were then tested. It was found that with our motor, the small, light, low pitch props delivered the same amount of thrust at a much lower current than bigger, high pitch props. The propeller eventually chosen is 5cm in diameter, which is only 50mm larger than the housing for our thruster. This proved to be an advantage because it allowed us to easily mount a nozzle. This propeller will develop approximately 4 kg of thrust at 9 amps. The max continuous current the motors are rated for is 11 amps; therefore the chosen props allow the best performance out of the motors while maintaining a safe operational current.

The nozzle (Figure 1) we made is designed to help increase the overall thrust in a couple of different ways. The profile of the nozzle has features loosely based off a Rice Nozzle, which is similar to a Kort nozzle. The throat of the nozzle is designed to be just slightly bigger than the propeller. This helps by directing thrust backwards. Without it, a lot of thrust would get lost off the tips of the propellers. From there, the nozzle's diameter increases with a 20° angle. We designed this converging-diverging nozzle on the basis of conservation of mass, with respect to flow rate. Since the density of water is constant, with a reduction in area, the fluid must speed up according to:

$$\dot{m} = \rho \cdot v \cdot A \qquad \text{Eq. 1}$$

So as the vehicle moves, the fluid is already moving faster as it hits the propeller than when it entered the nozzle. This will work in either direction since both sides are exactly the same (2).

1.3 Track System

The tracks are designed to make mobility underwater easier since navigating in 2D space is easier than navigating in 3D space. Having the ROV static on the bottom of the pool will allow for precise maneuvers to take place since the dimensions of the submarine are known. To further help the recovery mission, the tracks will be wide enough so the ROV can crawl over the hatch and settle upon the transfer skirt and pod hatch easily.

The tracks were purchased from VEX Robotics, and are made from identical universal plastic links that can be made for any length. There are 2 sprockets that drive the track and 4 idler assemblies that provide passive support and weight distribution. They are mounted in between 2 side pates with press fit double sealed ball bearings for the shafts. A potted motor is coupled to the shaft by a spider coupler that will take up any misalignment on the shaft. The ROV hull is mounted above the tracks so it can be driven over the Submarine.

The ROV will enter the water neutrally buoyant and will use a constant downward thrust to create the friction necessary between the bottom of the pool and the tracks to maneuver. We will still have full function of any thruster on the ROV whenever the tracks are not needed.

1.4 Manipulator

The manipulator for PantheROV V is a totally new design from previous years. It uses a linear actuator and a servo motor to function both as a translator and a rotator. The manipulator arm will be used to grab the pods and place them into the hatch. To do this we have made 2 slender rods to skewer the pods much like a fork would be used. The skewers will be lined up with the hooks by using our tracks to crawl on the bottom since they will be at the right height already. Once everything is lined up, the ROV will crawl forward using the tracks. The linear actuator is then activated and the skewers rise up since one end is hinged. From here, the pods can be taken over to the hatch and placed in again using the tracks. The skewers are designed so that all 6 pods can be lifted at once.

Also on the manipulator is the hatch opener that consists of a servo motor connected to a cylindrical disk. The disk is what will rotate the hatch so it can be opened. Once the hatch has been rotated, the ROV will back up and use the linear actuator and tracks to open the hatch.

The skewers and linear actuator have enough leverage to raise up high enough to complete the hose part of the mission while using the tracks to crawl on the bottom. Using the tracks for the entire mission has enormous benefits because it eliminates an entire dimension of movement. Although if at any time, crawling on the bottom isn't needed, 4 thrusters will still be available to use.

1.5 Vision System

The vision system of the PantheROV IV consists of four DLink DCS-900 Ethernet-enabled web cameras, which allows all video from the vehicle to be transferred to topside using a single Category-5 cable.

Contrary to using analog cameras and running separate coaxial cable lines for each camera, our vision design connects all of the cameras to a single Ethernet switch with patch Category-5 cabling and a single shielded Cat-5 cable is sent to the surface. Each camera communicates over the reliable Transmission Control Protocol (TCP) with a computer on the surface, sending Motion JPEG (M-JPEG) formatted files. The camera works by taking pictures at approximately 20 frames per second, and sends them to the topside computer; which uses software to reorganize the pictures into a motion picture.

At the front of the vehicle an acrylic viewing dome is built into the end cap of the main pressure hull. A pan/tilt capable DLink Ethernet camera is mounted to provide view through this dome. An issue with using a pan/tilt camera is the possibility of losing reference frame, or which way is forward. To fix this possible issue, the camera software contains center function which will return the camera to a direct center position.

The other three cameras are each encased in a 76.2mm diameter acrylic tube and mounted on the outside of the vehicle (Figure 2). One end of the tube, where the camera lens is located, is fashioned with a clear polycarbonate faceplate for a flat viewing surface.

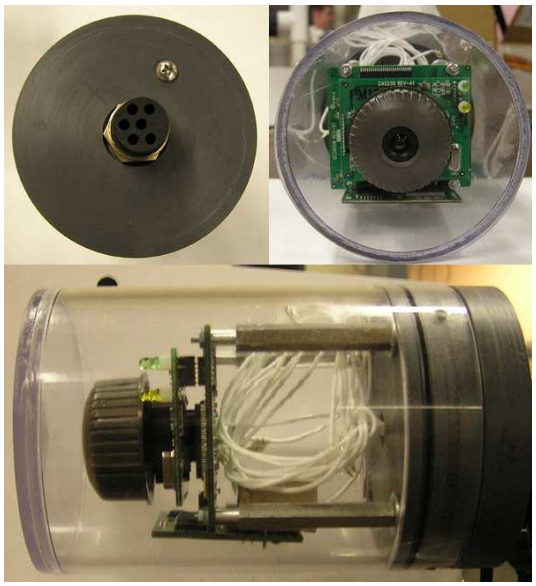

Figure 2 – Camera Housings

This end is sealed with clear acrylic cement. The other end of the camera tube is a removable end cap, constructed from Delrin, a plastic often used as a metal replacement. The end cap includes an o-ring seal, set screw groove, pressure release screw, and a 6-pin wet-pluggable Impulse connector. Each one of the cameras are mounted to the aluminum frame and connected to PantheROV V with an Impulse-constructed cable.

Electronics

2.1 Power

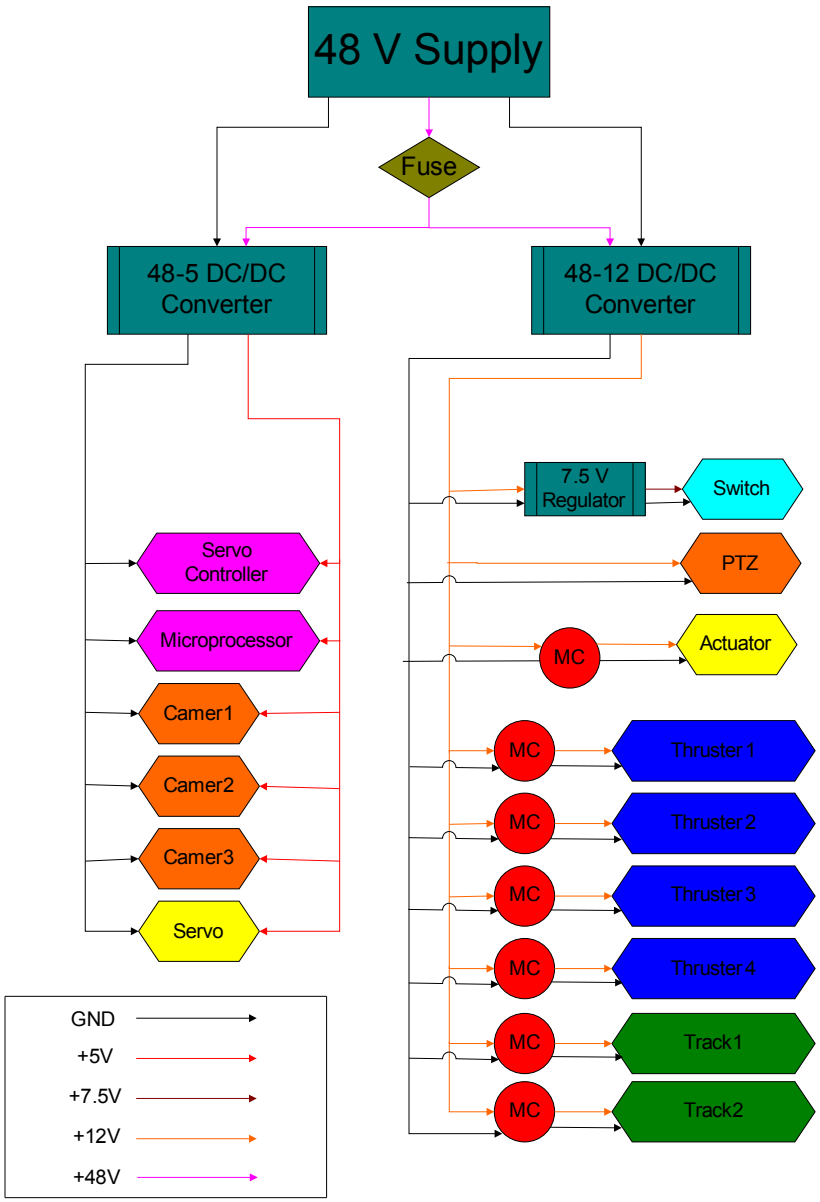

Figure 3 - ROV Power Distribution Schematic

To maximize power, with a limited 12 amp max, 48 volts will be run into the vehicle. To minimize the power loss due to resistance of the tether, the tether was re-engineered to reach all competition areas with minimal waste of line and power. Components on the vehicle, however, do not run off 48 volts. With the idea of maximum power, a heavy duty 48 volt to 12 volt DC/DC converter was obtained with the ability to provide nearly 1000 watts of power. This supply will be used to power motor controllers, motors, and pan/tilt camera. A 7.5 volt regulated system provides power for the switch. For the electronics, a 48 volt to 5 volt DC/DC converter was obtained with 100 watts of power. This supply powers the rabbit microprocessor, servo controller, cameras, as well

as other various components on the electronics board (Figure 3). With this power format, a maximum of 9 amps could be drawn from the surface at full power, creating a safer, more reliable vehicle.

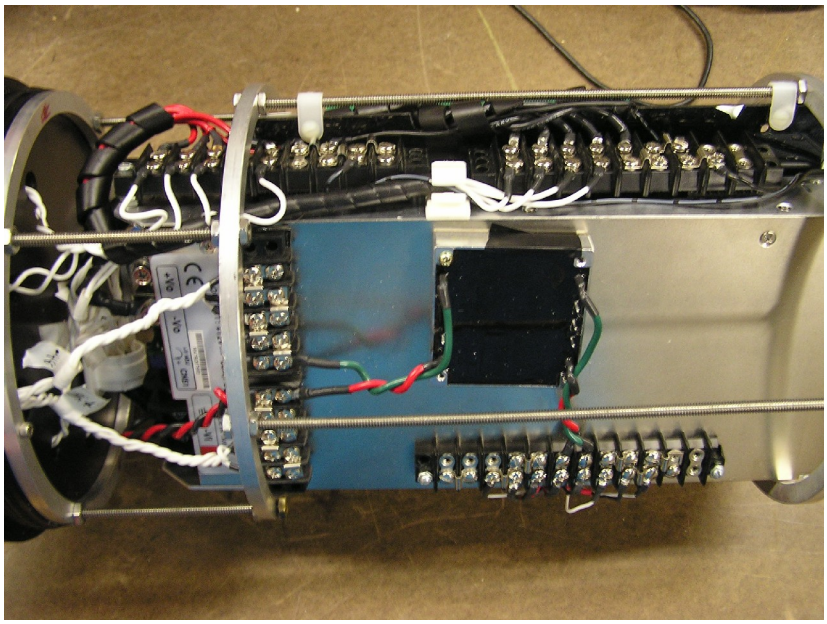

Figure 4 - Power Distribution System

Power was distributed throughout the vehicle using terminal strips (Figure 4). There are 6 strips on board the vehicle in total. One set is for the incoming 48v supply from the surface. This allows the 48v to be distributed to the 48v to 12v DC/DC and the 48v to 5v DC/DC. The 48v to 12v DC/DC converter is then connected to a heavy duty terminal strip, to distribute the 12v load. The 48v to 5v DC/DC likewise is connected to a set of terminal strips. It was necessary to use a power and ground terminal strips due to the use of isolated power systems, as discussed in the next section.

At the surface, the tether terminates through the power control box. This box contains the necessary 40 amp fuse, as well as a power disconnect and the main power switch. The power disconnect is an addition to the PantheROV V vehicle system. The power disconnect is basically a key that will physically disconnect all power to the system, before the main switch. This was installed as an additional safety device, which working on dangerous components such as the propellers or the high current 12v outputs, the key can be removed to ensure a switch can't be bump inadvertently. The tether then ends in a battery ring terminal to access the supplied power for the competition.

2.2 Electronic Protection

With a variety of electrical components within our system, protecting those individual components becomes a priority, especially within the environment a ROV travels within. To compensate for power surges that may arise on any of our driven components, the entire electrical system is isolated from any powered device. Isolation is created through an optically coupled signal transmitter and receiver within a small integrated circuit, HCPL2503. The signal is passed through an optical transmitter and received through pulled high receiver. In this process, the signal becomes inverted,

which we compensate with prior to the opto-isolators with an inverter, 74HCT240N. The enablement of this protection can be seen on the control board schematic in the appendices.

2.3 Electronic Signals

PantheROV V is controlled using multiple small interconnected electronic systems (Figure 5). Communication amongst components within our ROV is transmitted through various signal types and data packages. From the surface, Ethernet provides a high data package rate, as well as, reliable communication between our above surface computer and the microprocessor in the ROV. The cameras are linked with individual IP addresses to provide quick and efficient access for our visual needs.

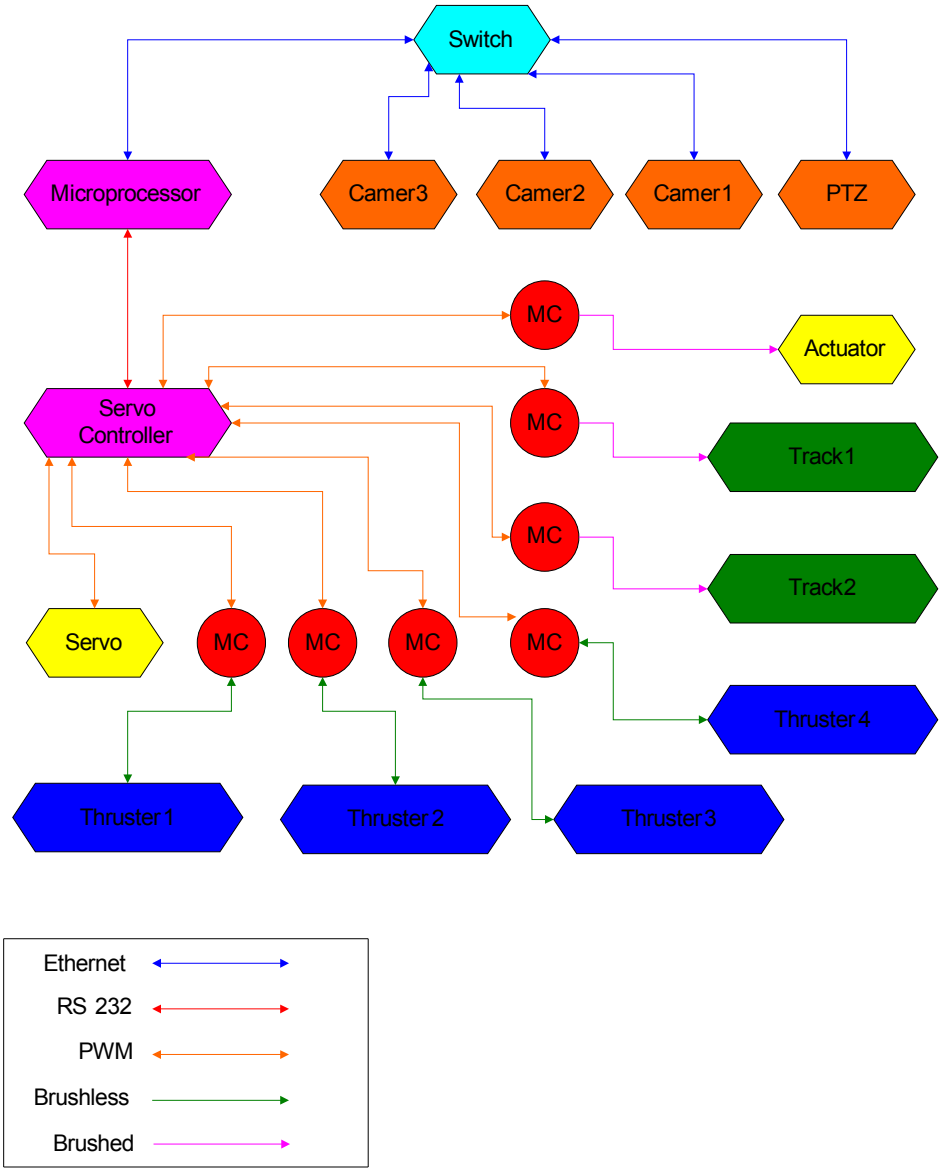

Figure 5 – Electronic Signals Flowchart

The microprocessor, RCM 3700, provides the communication and processing abilities for our vehicle. With multiple components to be controlled through PWM signals, a servo controller has been incorporated to provide these individual servo signals. For the servo controller we used a Lynxmotion SSC-32. Servos require a pulse every 20ms and measure the width of the signal. The width corresponds to the servo position. This servo controller works by receiving an ASCII string of commands from the µC and emitting the correct PWM signal on the selected channel.

The microprocessor communicates through a RS-232 signal with the servo controller, which provides more processing abilities for other communication. The servo controller controls the servo directly, while controlling the tracks, thrusters, and actuator indirectly through motor controllers. These motor controllers process the PWM signal and drive the motors with standard DC brushed, h-bridge drivable power to the actuator and tracks. Alternatively, the brushless motors on the thrusters all have there own ESCs (electronic speed controller) which interprets the PWM signal and dictates the motors duty cycle.

The main control board has been re-engineered to be more efficient and reliable than past designs. The board has been created using ExpressPCB (5) software, where the final board was then fabricated by the company and shipped to us for assembly. With the control board being a PCB, we were able to eliminate many conductive, interference, and field effects associated with a hand made board. The control board also allows for efficient use of real-estate through effective placement of integrated circuits. Attached in the appendices is the printed circuit board layout.

Software

3.1 ROV Microcontroller (µC)

The commands transmitted by the topside computer are processed and executed by the Rabbit RCM 3700 microcontroller. To program the microcontroller, a programming language called Dynamic C is employed. The language itself is much like the standard C programming language, with the addition of libraries and keywords that are specific to the Rabbit hardware. In order to transfer a program to the RCM 3700, it is *cross compiled* over a serial programming cable. The act of *cross-compiling* converts the machine code from the architecture of a PC to one that the µC processor can understand (4).

The software on board is written with robustness and safety in mind. As such upon power up all motors are immediately initialized to stop. Then the µC acts as a server and waits for a connection. Once a connection has been established it tracks the time between received commands. If the time exceeds 2 seconds it is assumed the connection is lost and sends a stop command to all motors. This is known as a keep-alive timeout. Then the µC resets the socket and goes back into waiting for a connection. (See Figure 6 below)

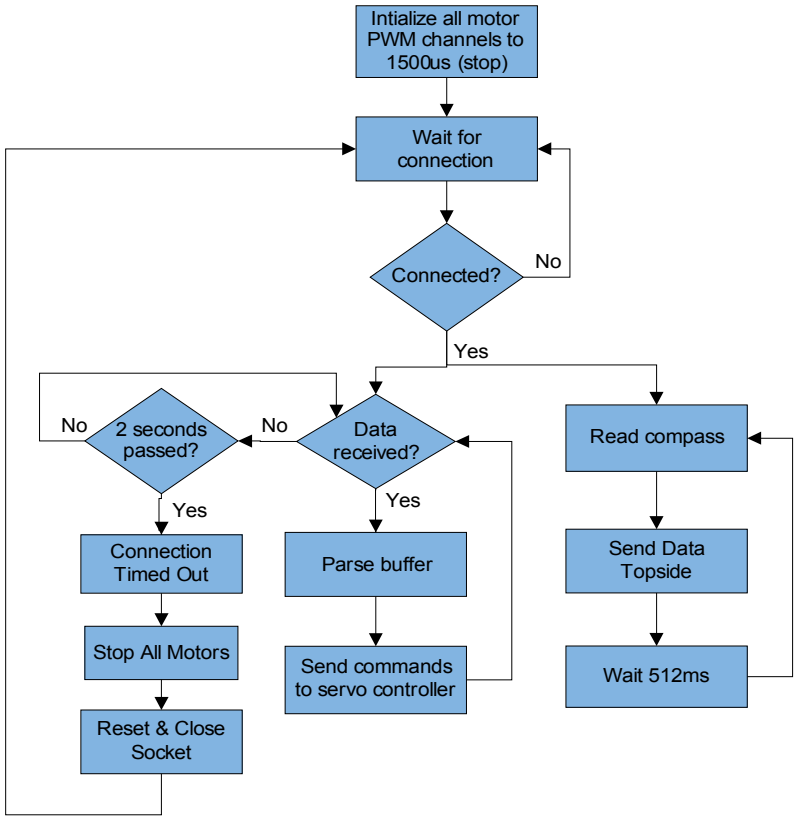

RCM37000 SOFTWARE BLOCK DIAGRAM

Figure 6 – ROV µC Software Flow Chart

3.2 Topside Control

The top side software is what we use to control the ROV. This year the software was built upon lasts which was written in Python programming language[7]. Python offers many productivity benefits and cross platform support, meaning it can be run many operating systems without requiring modification to the program. It is an interpreted language which means that when the source code is run through the python interpreter it is translated into more efficient intermediate code which is immediately executed. By using an interpreted language when changes are made to the source code all one must due to see the effects in the program is restart it.

The GUI was built using PyQt4[8], which is a Python binding for the powerful Qt4[9] library. Qt's GUI library is used by many large software companies in popular applications such as Google Earth and the Linux version of Mathematica. This was built using Qt Designer which provides a visual way to create the front end you will see. It then automates the tedious task of creating the necessary code to place the proper visual objects in the right place. This allows the visual objects to then be connected to functions. Such as when a button is clicked it will emit the signal “clicked()”. This signal can be connected to a function that will execute when ever the signal is sent. (Figure 7)

Qt4 also comes with its own thread class (QThread). This allows the program to be split up into multiple concurrent processes. This is very necessary when you have some part of your program constantly running and still require the UI to be responsive. To allow for inter-process communication signals must be used. This means for the worker thread to exchange data with the UI thread it must emit a signal and vice-versa. Then during the UI's main loop it processes any pending signals, calling the corresponding connected function.

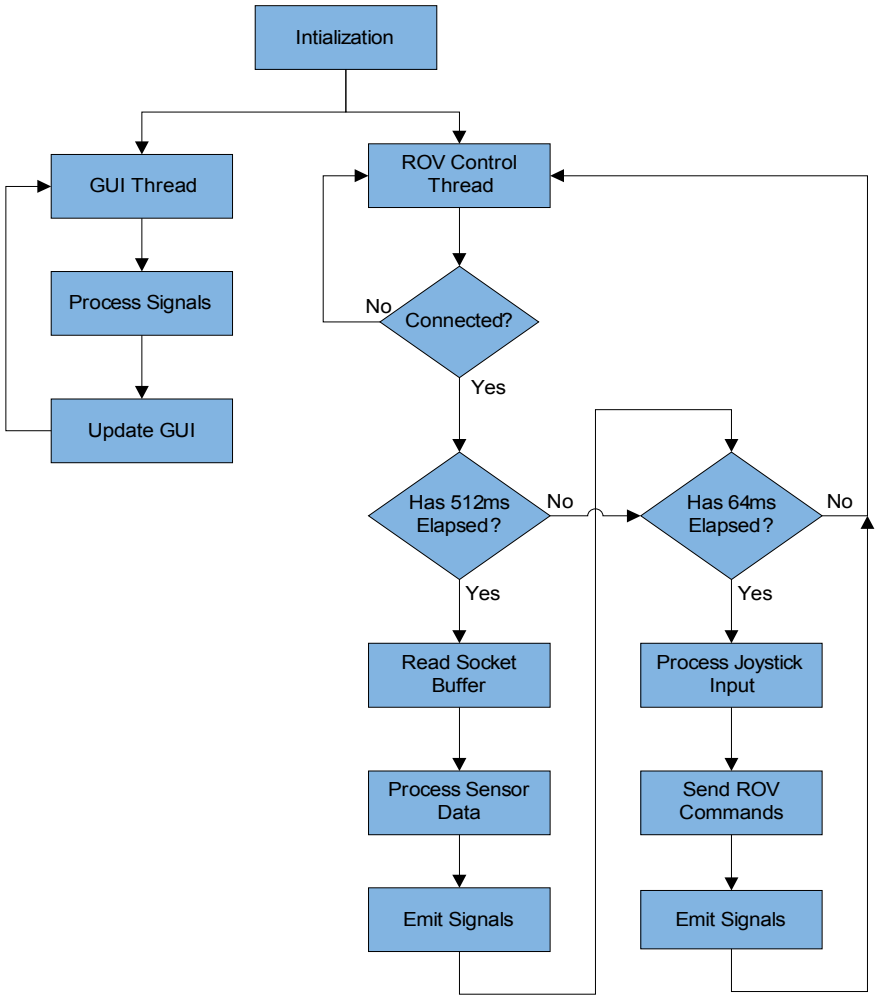

TOPSIDE SOFTWARE BLOCK DIAGRAM

Figure 7– ROV Software Topside

The internal design is split up into 2 processes, UI and Control. The user interface's (GUI) thread is responsible for updating the UI and handling inter-process communication. The Control (worker) thread is the most important and handles ROV communication, joystick input, and control. When a movement function is called it creates the proper array of values and sends them to the µC. Then it emits a corresponding signal for the GUI to process and update its display accordingly.

The control module contains two classes, ROVControl, and ROVControlThread. The ROVControl class contains the functions to process new input, emit signals and communicate with the ROV. The ROVControlThread spawns its own thread with ROVControl and QThread as a parent classes. This way it inherits all functions and properties which are present in ROVControl and QThread. ROVControlThread contains 2 timers that are connected to internal functions. The first timer will execute 'process input' every 64ms to read joystick movements and send corresponding commands to the ROV. The second timer runs every 512ms to read in sensor data from the TCP/IP connection and emit signals for the GUI to display. By running ROVControl in its own thread, it can execute its operations independent from the rest of the program.

Submarine Rescue

Figure 8Avalon matted atop a submarine

Avalon is a DSRV (Deep Submergence Rescue Vehicle) manned by a crew of 4 and capable of rescuing 24 persons at a time in up to 2000 ft. depths with a maximum operating depth of 5000 ft. The DSRV was in a ready to rescue status 24/7, and capable of being transported by Air Force C-5 to anywhere in the world within 24 hours. Once the DSRV is on location, it attaches itself to a mother submarine, which carries the DSRV to the rescue site. The DSRV uses mercury in a completely sealed system to allow for matching a downed submarine at any angle, up to 45 degrees in both pitch and roll, so as to mate, and attach to a downed submarine on the sea floor. Maneuvering is accomplished using 4 thrusters and one main propeller. Once the DSRV is matted to the

injured submarine the distressed crew can climb aboard, where they will then be transferred either onto the mother submarine or a surface support ship.

In a sense the MATE competition asks the ROVs to be miniature DSRV in the simplest form; requesting that the ROVs be able to mate a transfer skirt to a rescue hatch for a set amount of time. Additionally, the ROVs must able to survey the area and deal with other underwater obstacles prior to any advancement in the mission. This same technique has been utilized by Avalon. With further oceanographic exploration, having the ability to safe lives, while risking fewer, would allow for greater possibilities in successful rescues through the use of ROVs.

Troubleshooting Techniques

A major troubleshooting technique used on PantheROV V was working backwards to isolate the point of "trouble". During our initial dry test we discovered unpredicted movements among the actuator and servo for our manipulation. After verifying all connections we used the oscilloscope to probe the signal from its origination towards the actuator and servo. After viewing the initial waveforms, it was discovered that noise was being generated by the motor controller for the actuator through its line to the arm. The pulsating power signal to the actuator was providing a "ghost" PWM signal through the servo line. We then eliminated the noise with an end of line capacitor, acting as a low pass filter for our signal.

Lessons Learned

This year's team consisted of four second year members, along with just one first year member. Managerial decisions were then divided among the members. Through hard economic times, as well as, hours of paperwork, obtaining a respectable budget became more demanding than expected. Throughout the semester obtaining the finances needed for our vehicle was an overwhelming factor. Through understanding the political and economical processes for obtaining finances, our team has learned to budget our money, as well as, design an efficient vehicle through used parts and proficient engineering.

Reflections

Being my second year on the ROV Team I have had the ability to understand what challenges are going to arise during the year technically with the vehicle. New for me this year was learning the school systems for all the paperwork that goes behind the scenes of the ROV Team. It was interesting and challenging for me to write up

proposals, attend meetings, defend our allocations, and manage our budget. Doing this has allowed me to understand more of the relative concepts associated with the working world. I am now more appreciative with the management that there is and how politics and associations work behind the scenes.

--- Trevin Erdmann

Challenges

A major challenge faced by the team this year was the continuing difficulty in obtaining and spending money for the vehicle. The majority of the vehicle is funded by grants from the UWM Senate Appropriations Committee (SAC) and then the money is distributed by the Student Activities Office (SAO). Because of mishandling of funding by other organizations, the paperwork for expenditures has increased significantly. Also the policy has changed so reimbursements are not recommended; therefore all purchases have to be approved through SAO. This means that all orders take around 3 weeks to be processed and completed. To overcome these challenges, the team had to plan early as to what purchases had to be made, and get the paperwork in early, to allow for the ordering to take place.

Through tactical planning and early engineering our vehicle was being built on our pre-allocated timeline. However, re-engineering occurred midway through our last semester to optimize efficiency and simplicity. This created an abundance of parts originally designed for alternative uses. Through proficient engineering we were able to re-utilize these parts in effective new techniques. This ability to overcome major redesign changes late in the build of a vehicle was overwhelming; however, it challenged us to strive towards a more reliable vehicle than originally designed.

Future Improvements

PantheROV V has created a new sturdy foundation for PantheROVs in the future. It has incorporated past knowledge, along with new ideas, to provide an integrated vehicle for years to come. With the new effective stability of the tracks, a more reliable foundation has been implanted where further development can occur on the manipulation techniques on future vehicles.

In the future, a more robust manipulation arm will be beneficial to our vehicle's already robust platform. Though the current arm provides sufficient actuation and manipulation for this year's competition, it would be ideal to create a manipulation device that allows for use for various challenges, rather than be designed towards specific tasks.

An additional improvement that would be helpful in the piloting and stability of the vehicle would be a multipoint active buoyancy system. A system like this could allow the vehicle to self level itself, or tilt to a pre-decided angle. This system could also aid in

the recovery of larger payloads, by increasing the positive buoyancy of the system, the amount of thruster power needed would be reduced.

2009 Budget Sheet

Purchased Items				
Description	**Vendor**	**Qty**	**Unit Price**	**Total**
Brushed Motors	Lynx Motion	2	$30.00	$60.00
Motor Controllers	Lynx Motion	3	$50.00	$150.00
Tracks	Vex Robotics	2	$15.00	$30.00
Shaft Couplers	McMaster Carr	5	$5.83	$29.15
Linear Actuator	Lynx Motion	2	$60.00	$120.00
Waterproof Connectors	Impulse	8	$56.00	$448.00
Purchased Grand Total:				$837.15
Reused Vehicle Components				
Description	**Vendor**	**Qty**	**Unit Price**	**Total**
Brushless Motors	Astroflight.com	5	$89.95	$449.75
Motor Controllers	Dynamite RC	5	$59.99	$299.95
SSC-32 Servo Controller	Lynx Motion	1	$39.95	$39.95
Shaft Couplers	McMaster Carr	5	$5.83	$29.15
48v - 12v DC-DC converter	TRC Electronics	1	$349.99	$349.99
48v - 5v DC-DC converter	TRC Electronics	1	$89.00	$89.00
General Electronic Compo-nents	Jameco	1	$135.00	$135.00
Frame Interconnects	Holliander	1	$200.48	$200.48
Waterproof Connectors	Impulse	1	$817.00	$817.00
Dlink DCS 900 Webcams	Buy.com	4	$82.99	$331.96
Linksys Ethernet Switch	Buy.com	1	$42.99	$42.99
203.2 mm Aluminum Hull	SpeedyMetals	1	$63.06	$63.06
OS-1000 Tilt Compensated Digital Compass	SparkFun.com	1	$100.00	$100.00
RCM 3700 Microcontroller	Rabbit Semiconduc-tor	1	$59.00	$59.00
Reused Grand Total:				$3,334.28
Travel Expenses				
Description	**Vendor**	**Qty**	**Unit Price**	**Total**
Van	WATER Institute	1	######	$1,000.00
Housing	MMA Dorms	3	$80.00	$240.00
Donated Parts/Services				
Description	**Vendor**	**Qty**		
38 m Shielded Twisted Pair	Igus	1		

38 m 4 Conductor 10 AWG cable	Igus	1
Pressure Hull Machining	Hammel Tool and Die	1
Shipping of Vehicle	WATER Institute	1

Acknowledgments

Great Lakes WATER Institute:
Dr. J Val Klump – Director and Senior Scientist of GLWI
Robert Paddock – Researcher at GLWI
Greg Barske – Machinist at GLWI
Randy Metzger – Machinist at GLWI

University of Wisconsin-Milwaukee:
College of Engineering and Applied Science at UW-Milwaukee
Mike Brown - UWM Machine Shop
Senate Appropriations Committee (SAC)
Student Activities Office
Tom McGinnity - Assistant Dean of Students
Jennifer Lyon - Business Manager

Companies:
Hammel Machine Products
Bearings, Inc. (Milwaukee, WI)
Impulse Enterprise, Inc.
IGUS, Inc.
Metallurgical Associates, INC
Edmund Optics, Inc.
Speed Rail
Generic Logic

M.A.T.E. and all the people who helped make the ROV Competition possible.

Previous ROV Team Alum who helped lay the foundation for the ROV Team @ UWM

And a very special thanks to our mentor/advisor Dr. Consi

References

(1) Astroflight Inc.
3311 Beach Ave.
Marina Del Rey, CA 90292
(310) 821-6242
http://www.astroflight.com

(2) http://www.olds.com.au/marine/maximizing_propulsion_efficiency/index.php

(3) D-Link Corporation
No. 289, Sinhu 3rd Rd,
Neihu District,
Taipei City 114,
Taiwan, R.O.C.
886-2-6600-0123
http://www.dlink.com/

(4) Rabbit Semiconductor Inc.
2932 Spafford Street
Davis, California 95616 USA
(530) 757-8400
http:/www.rabbitsemiconductor.com/

(5) ExpressPCB

(8) Python http://www.python.org/doc/

(9) PyQt4 http://www.riverbankcomputing.co.uk/static/Docs/PyQt4/pyqt4ref.html

(10) Qt4 http://doc.trolltech.com/4.0/

(11) SDL http://www.libsdl.org/cgi/docwiki.cgi

(18) http://navysite.de/ships/avalon.htm

(19) http://www.globalsecurity.org/military/systems/ship/dsrv.htm

Figure 7 **:** http://www.murdoconline.net/archives/006177.html

Appendices

Appendix A: Control Board Schematic

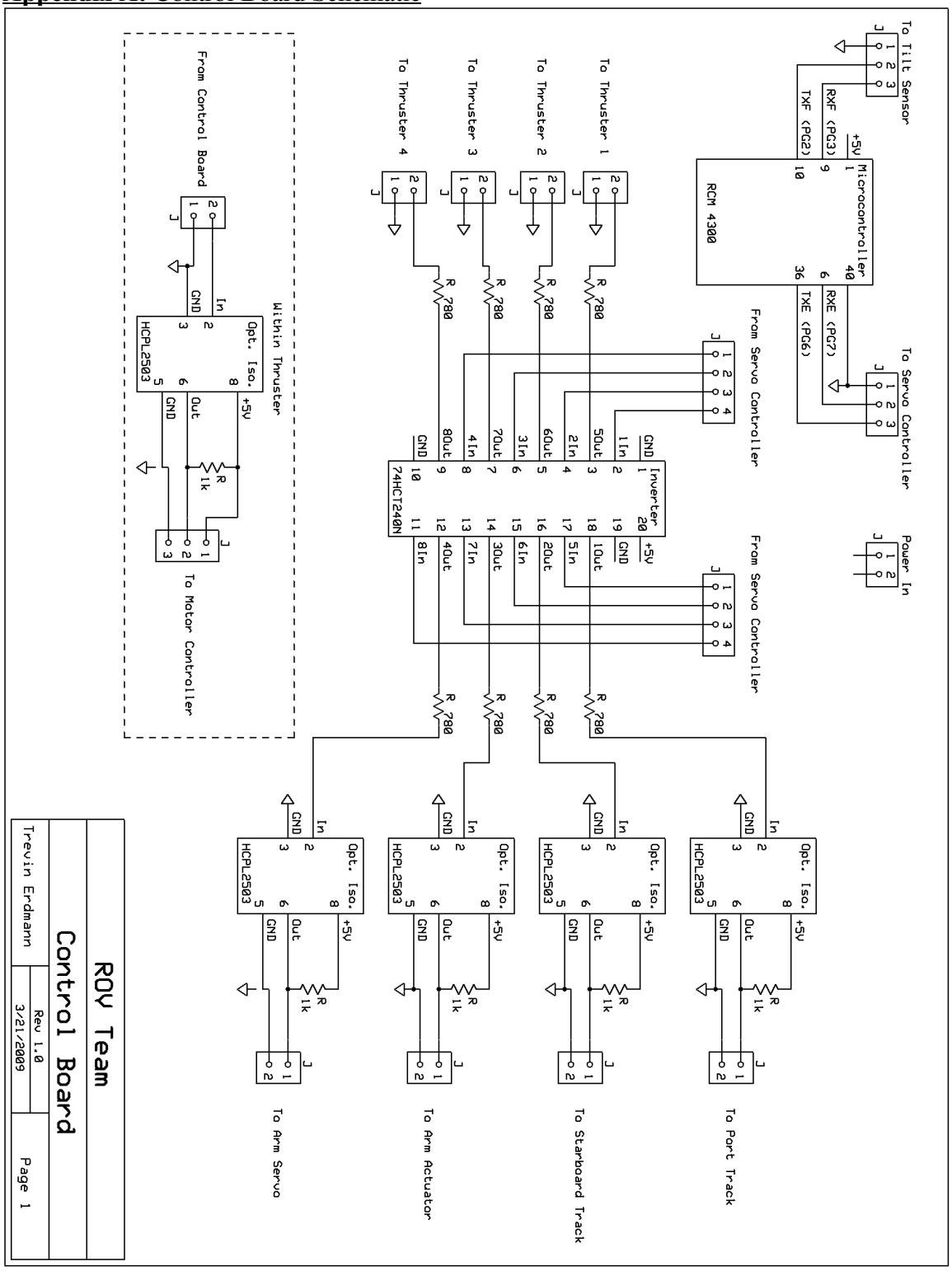
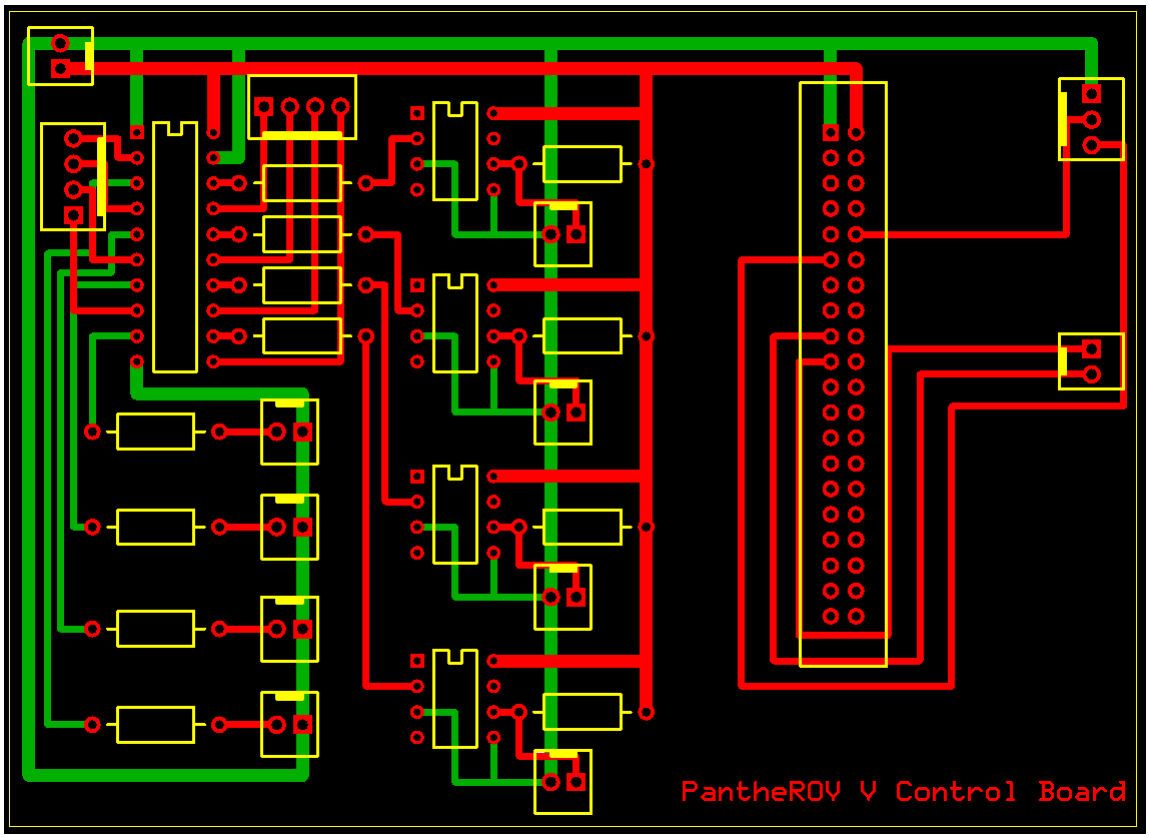
Appendix B: Printed Circuit Board Layout