Jet City:

Aircrafts Earthquakes & Energy

2018 MATE International

ROV Competition

Technical Documentation

Member Name	Company Roles
Ella Ashford	CEO, Pilot, Electrical and Software Engineer
Logan Flanagan	Mathematician and ROV Tool Engineer
Nathaniel Ashford	CFO, Pilot and Mechanical Engineer
Everest Ashford	Safety Captain and Tether Manager
Ayden Ratliff	Hydraulics and Manipulator Engineer
Gabriella Ashford	Mentor
John Downing	Mentor
Otto Smith	Mentor
Betsy Blinks	Mentor

The Sea Dragons are affiliated with the Port Townsend STEM Club

Table of Contents

1. Abstract

The Sea Dragons Company is composed of five students representing fifth through eleventh grades, from Port Townsend, WA. This company stepped up their 2018 remotely operated vehicle (ROV) design to be robust, efficient and reliable, in order to meet the criteria specified within this year's theme, Jet City: Aircraft, Earthquakes and Energy. The company has a diverse set of skills, resulting in each team member specializing in ROV features such as hydraulics, mechanical design, electrical design and programming.

The manipulator on the S.S. Dragon, the Sea Dragons' ROV, is a custom hydraulic design that utilizes a LEGO based gripper. This manipulator went through multiple prototypes involving extensive analysis and testing, based on the product demonstration tasks. The manipulator's strong grip makes it a critical tool, able to complete task such as eelgrass restoration, tidal turbine installation and lift bag placement. The company's lift bag, used to bring objects from an aircraft wreckage to the surface, was designed to complement the manipulator design. This enables lift bags to be reliably placed on the aircraft components, with maximum efficiency. This aircraft recovery task is one of the most important missions for the Sea Dragons, because of its real world relevance. This year the company will be partnering with Olympic National Park to search for an underwater wreck using their ROV and skills gained through this MATE challenge.

2. Project Management

Our company has a five week build season. Members participate in other STEM competitions and this creates scheduling challenges that the team has to overcome. The time limitation intensifies both prototyping and the overall design process. We work daily on ROV related projects, prototyping and tank testing several times each day in our workshop. During these five weeks, the company members log over 800 hours. We work hard to split up tasks so each company member works in reasonable windows, with lots of breaks, to avoid getting burned out.

2.1 Timeline:

Because of our five week build season we have lots of work to do in a short amount of time. Company members will split into specialized fields to maximize work effort. An important part of our company timeline is scheduling ROV operating practice time. We have found that no matter the how great the ROV engineering, the pilots still need to have twenty plus hours of operating practice to do well. Here is an outline of our work efforts over our five week ROV build season.

Sea Dragons Company Timeline

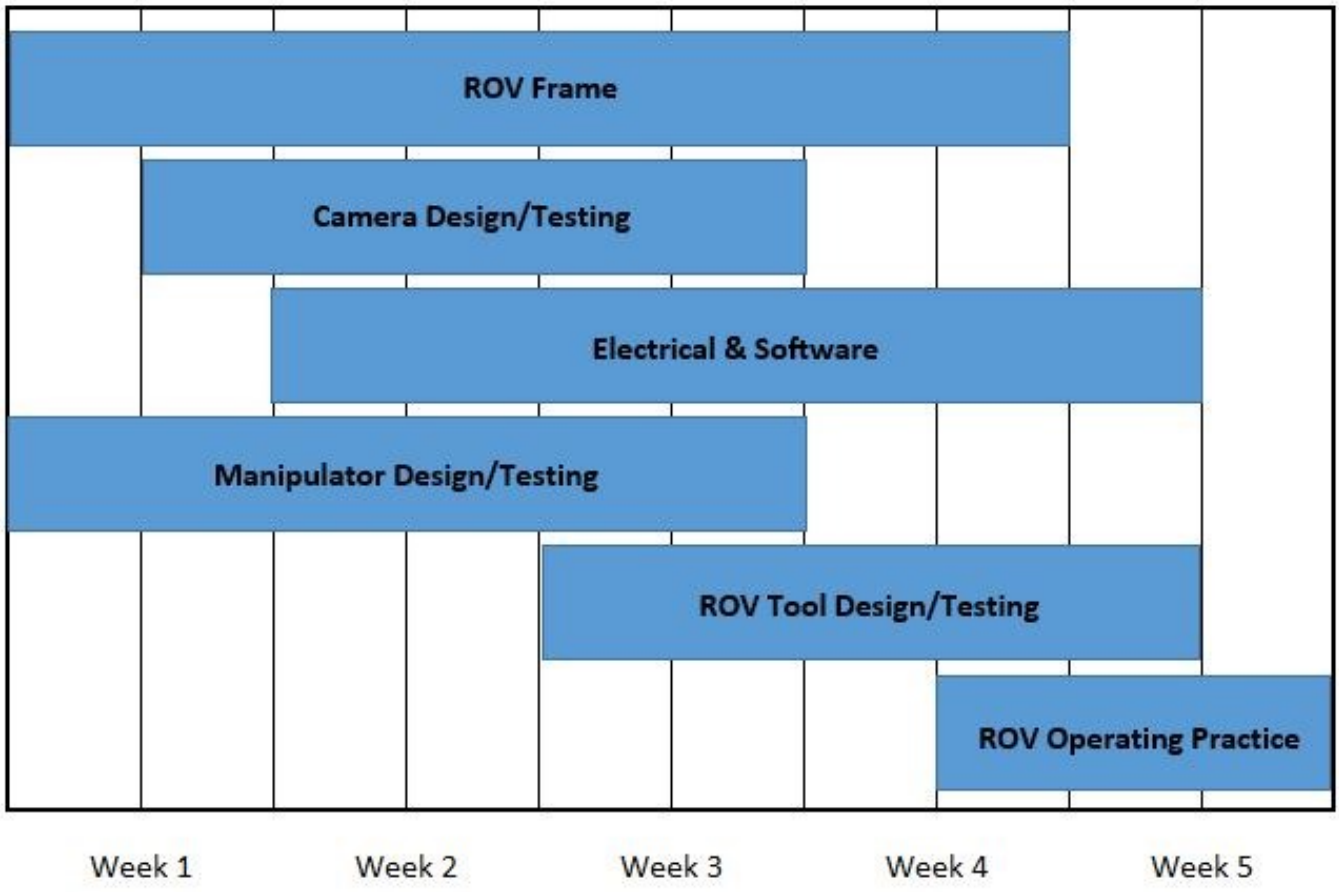

2.2 Company Assignments:

Each company member specializes in a certain component of the challenge. The team gives progress reports to our company's CEO, and presents their specialized knowledge during engineering presentations. It is important to have a well-balanced team that can work together to create the best ROV design. Listed below are company assignments.

Figure 1: Team Picture: Left to Right / Back to Front: Logan, Ella, Nathaniel, Everest and Ayden

Photo Credit: Gabriella Ashford

Hydraulic and Manipulator Engineer: Ayden Ratliff - Designs and builds all hydraulic systems that are integrated into a manipulator design for the ROV, and designs the Fluid Power Diagram.

Electrical and Programming Engineer: Ella Ashford - Designs and builds all electronics on the ROV, and integrates the control systems with the thrusters. This includes programming the Arduino, creating the SID, and leading troubleshooting efforts on the system.

Lead Mechanical Engineer: Nathaniel Ashford - Determines optimum location for thrusters, builds and designs the ROV frame, and calculates buoyancy. This year, Nathaniel is also in charge of developing a custom low cost underwater camera system for the ROV.

Safety Captain & Tether Manager: Everest Ashford - In charge of making sure the company complies with all safety requirements, responsible for tether management, creates JSA (Jobsite Safety Analysis), and oversees ROV safety features.

ROV Tool Engineer and Mathematician: Logan Flanagan - Designs and builds ROV tools such as lift bags and OBS (Ocean Bottom Seismometer). The ROV Tool Engineer is also responsible for the documentation of non-ROV devices, and is the mathematician for the team.

3. Design Rationale

Our company wanted to provide an ROV (Remotely Operated Vehicle) that could complete the difficult tasks associated with this year's theme, Jet City: Aircrafts, Earthquakes and Energy. To complete this goal we challenged ourselves to improve upon our existing knowledge and build a custom frame that is not PVC based. The ROV needs to withstand the strong currents of the Puget Sound and the team determined that more than just PVC support was needed. The ROV frame is built of plywood with external thruster guards. The ROV utilizes six Blue Robotics T-100 thrusters that provide maximum efficiency, while providing stable thrust for our ROV. All onboard electronics are housed in a watertight enclosure that provides buoyancy alongside non-compressible foam blocks.

Another important feature of the ROV is a reliable manipulator that can be easily modified to best complete its various missions. Our manipulator uses a hydraulics system through 100 mL syringes, which in turn power a custom LEGO manipulator. Although this manipulator is simple in design, it is extremely reliable and has a powerful grip. The manipulator has one range of motion that includes opening and closing the LEGO gripper. This type of motion is perfect for tasks like eelgrass restoration, lift bag placement, and manipulating objects surrounding activation of the OBS (Ocean Bottom Seismometer).

Lastly, size and weight are the final contributing factors in the design of our companies ROV. It was important to reap the full benefits of a small, lightweight and compact ROV. An ROV that meets these criteria performs better, reacting to less drag, with better power and thrust as a result. The goal is to stay below the 12 kg and 60 cm size and weight limitations set forward by the 2018 MATE challenge. This advantage not only provides our company with a better ROV control, but also awards us an additional 20 points! Our ROV's total dimensions are: 26.7cm by 54cm by 45.5cm and weighs 10 kg.

Figure 2: S.S. Dragon CAD Model
Designed by Ella Ashford

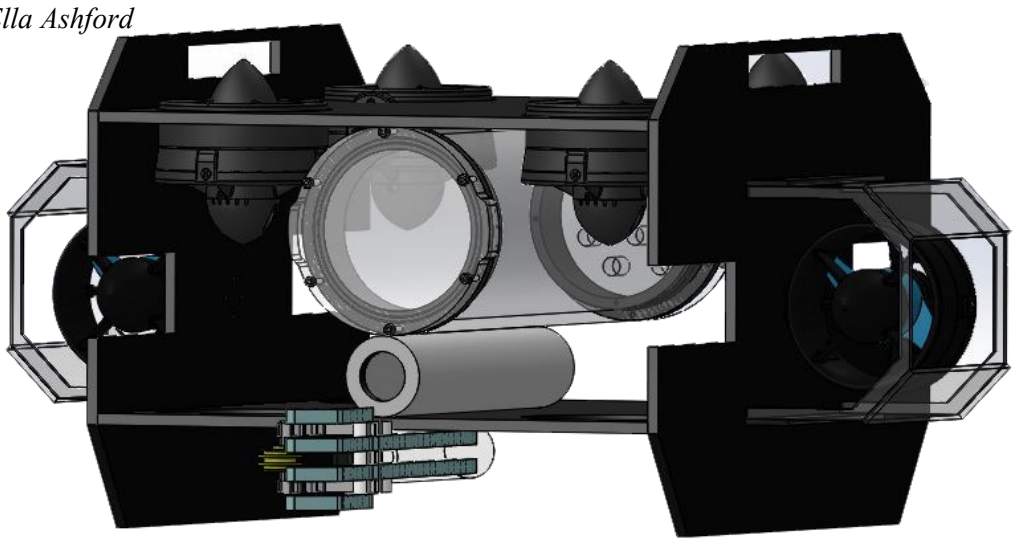

3.1 ROV Frame:

Building and designing a custom ROV frame that meets the needs of the Jet City theme was challenging. Stepping away from the traditional method of PVC is difficult because small design changes require building entirely new components from scratch. Because of this limitation, the team digitally designed multiple ROV frames using Solidworks CAD software. After multiple prototypes and system evaluations, the company decided to use the design made of plywood components. This frame has a streamlined design, easily manufactured with the tools the company has available.

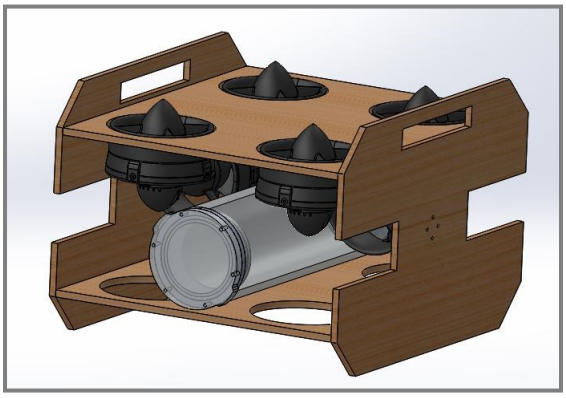

Figure 3: Early CAD prototype of frame Designed by Ella Ashford

Picking the material to build the ROV frame was a difficult decision for us. Originally we wanted to construct the frame out of plastic based material or metal based material. But because of our limited resources and access to equipment in our area, we had to improvise and work with what we had available. Plywood turned out to be a viable material because of its buoyancy and availability. The S.S. Dragon frame is built out of marine grade plywood that is painted with marine grade paint to ensure material durability.

3.2 Flotation and Ballast:

The flotation on the S.S. Dragon is polystyrene closed cell foam that reacts with minimal compression under pressure. The ballast on the S.S. Dragon is solid metal rebar. The frame is constructed out of painted wood and is positively buoyant. All these components make the S.S. Dragon slightly positively buoyant, so we can maximize thrust while lifting objects off the pool bottom. Initially, we did have some problems. The negatively buoyant thrusters were above the air filled (positively buoyant) electronics canister, so that the center of buoyancy on the ROV was below the center of mass. This meant that the S.S. Dragon would flip upside down. We had to add rebar to the bottom of the S.S. Dragon and polystyrene foam in several places on top, in order to make the center of buoyancy higher than the center of mass. Another problem we faced was spacing. Because the four vertical thrusters are mounted just underneath the top plate, there wasn't very much space to mount the flotation so that it didn't interfere with vertical propulsion. To solve this, we had to attach several small pieces of flotation instead of one large piece. Our thrusters provide 1.8kg for lift. We have approximately 2.7kg or 26.7 Newtons of polystyrene foam for lift and .45kg of rebar on the S.S. Dragon as ballast. The flotation and ballast measurements are calculated using a spring scale and a bathroom scale.

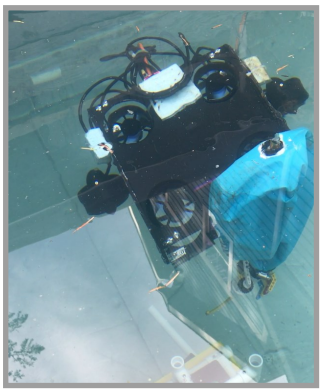

Figure 4: ROV Buoyancy Photo Credit Gabi Ashford

3.3 Thrusters:

Our company has a policy of reusing components and recycled material whenever possible to be eco-friendly. The six T100 thrusters are a big investment but we wanted to have dependable, controlled thrust. It is essential to have a strong ROV frame with powerful thrusters to maintain accuracy during missions. In the initial prototype of the ROV frame, different thruster positions were tested. A lower cost version of the ROV used four thrusters instead of six. After extensive testing it was determined that four thrusters were needed for lift because of stability. Having only two thrusters assigned to the ascent and descent caused tipping and pitching when we needed accuracy.

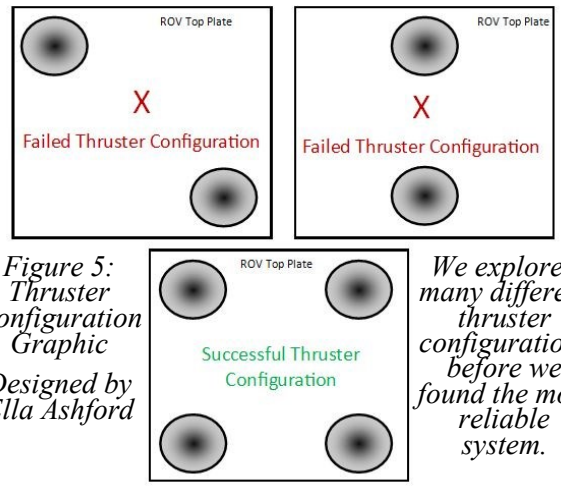

Figure 5: Thruster Configuration Graphic

Designed by Ella Ashford

We explored many different thruster configurations before we found the most reliable system.

The T-100 thruster is a brushless electric motor that is a low cost, high performance option perfect for ROV designs of our weight and size class. Its design has many benefits, including plastic bearings that are not susceptible to rust like we often see in more traditional options. Unlike other thrusters, the T-100 has no air or oil filled components, and water flows freely through the entire system, acting as a lubricating agent. The thrusters can be connected to any electronic speed controller (ESC) and controlled through a microcontroller.

This year we purchased six of the new Basic ESC sold by Blue Robotics. These are brushless, sensor-less electronic speed controllers, that are designed to be used with the T-100 thrusters. The Basic ESC has a power and ground input as well as a PWM (Pulse Width Modulation) input and a ground for this signal. The ESC has three output phases that connect directly to the T-100. The signal range is 1100 – 1900 microseconds with the stop position at 1500 microseconds. For safety reasons, and to reduce noise interference, our lateral thrusters have a range of 1300-1700 microseconds and our vertical thrusters have a range of 1400-1600 microseconds. This correlates to a total of 1.8kg of thrust forwards and backwards, and 1.8kg of vertical thrust. When running all thrusters at once, we are drawing a total of 8 amps.

Figure 6: T-100 Thruster
Photo Credit: Blue Robotics

The T-100 thrusters are mounted directly to the plywood frame. The vertical thrusters use the Blue Robotics mounting system, and forwards/ backwards thrusters are screwed directly into the frame.

3.4 Electronics Enclosure:

This year we decided to use a Blue Robotics Watertight Enclosure to enable easy access to our electronics. In previous years, we have sealed our components in custom canisters. The drawback to this method is that once sealed, they cannot be reopened. With the new level of sophistication in our electronics, we wanted to be able to modify our electrical designs throughout the season. After analysis of the various canisters Blue Robotics provides, we decided on the 4" Series which has an inner diameter of 10.16 cm. This was just the right size for our electrical system and fit perfectly within the frame of our ROV. The 4" Series Watertight Enclosure is a clear acrylic tube that is 6.3 mm thick. This has interchangeable fitted endcaps that use double O-rings on a flange to create a watertight seal. Our company uses the dome endcap to accommodate the length of the camera housed inside the canister. The other endcap is aluminum based, and has 14 holes that are compatible with cable penetrators for our tether and thruster cables. We use the 6mm cable penetrator to allow our cables to pass through the canister without the risk of leaks. We have a strain relief system that prevents pulling the endcap off when force is applied to the tether.

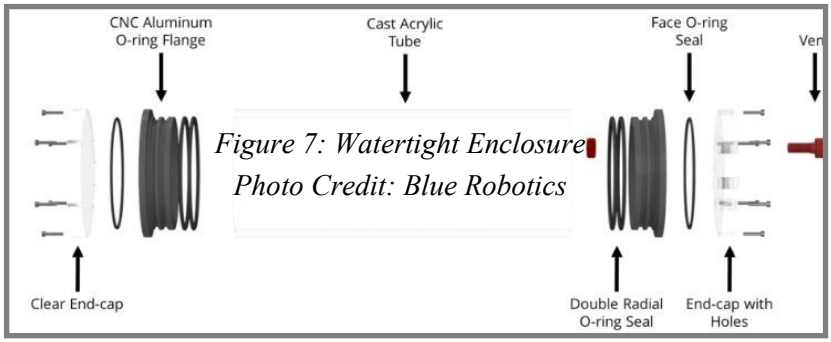

Figure 7: Watertight Enclosure
Photo Credit: Blue Robotics

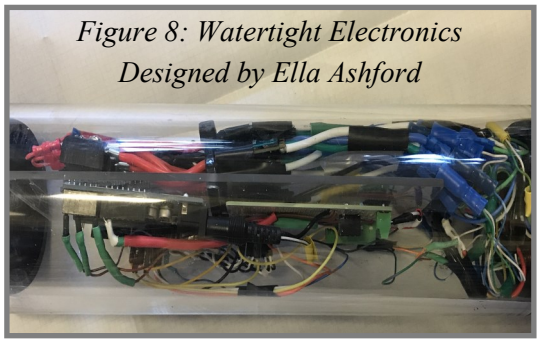

Figure 8: Watertight Electronics Designed by Ella Ashford

Inside the enclosure we have a polycarbonate insert that houses all of our electronics. Attached to this is our Arduino Uno that converts analog potentiometer (joystick) signals to a PWM signal. The potentiometer has a range of 0 to 1023 on each axis. As the Arduino system boots, it correlates the starting position of the joystick with a PWM signal of 1500, meaning that the thrusters are stopped. We decided to use only a single axis on our joysticks, which made operating the ROV more straight forward and logical. As you move the joystick the analog signal changes, and the Arduino matches this signal within the PWM range we set in our computer program. This range is 1300-1700 microseconds for lateral thrusters and 1400-1600 microseconds for vertical thrusters. We were able to check pulse width and accuracy using an oscilloscope. The Basic ESCs (electronic speed controllers) were critical to our electrical system. Without them our three phase thrusters would not receive commands. They are mounted securely on our custom polycarbonate insert. It is important that they are appropriately spaced to avoid overheating and electrical shorts. Many refits were necessary to gauge the distance which would preclude interference. By connecting them to the power distribution block we avoided a mess of wires. Bullet connectors are used to connect the output to the thrusters. This way we can easily detach system components.

We made an important discovery with the Arduino Uno and potentiometers, that an analog reference is needed to eliminate small voltage differences between the 5 volts in the control box and the 5 volts provided by the Arduino. Without this reference, the difference in voltage caused anomalies that resulted in inaccuracies throughout the system.

Power coming into the canister is attached to a power distribution block that limits the number of stray wires and overall adds a neater appearance to the enclosure. This way we need fewer power and ground lines throughout the system. This is important because in the event of electrical failure, fewer connections to check results in faster troubleshooting.

Another safety and organizational feature in our watertight enclosure is the use of a ½ sized Perma-Proto board. Perma-Proto boards are a thin circuit board similar to a breadboard. These boards allowed us to use screw terminals to neatly receive signal wires from our tether. When wires are neatly organized and labeled it makes it much easier to troubleshoot. The Perma-Proto board is critical in keeping our enclosure neat and presentable. The screw terminals also assure that thin wires especially susceptible to breakage are held firmly and securely in place.

3.5 Control Station:

The topside control station (used to control the ROV) is housed in a multi-layer plastic case that we custom designed and built, to protect the joysticks and monitor during transportation and deployment of the ROV. There is a removable panel that separates raw electronics from our human interfacing components. This bottom section receives power and connects joystick signals to our tether. All components in the case have adequate strain relief to avoid broken wires. We also include several power distribution bars and terminals to securely attach wires. The pilots in our company interface with a single monitor and joysticks on the top part of our control box. Our color monitor is powered by the MATE regulated AC power strip. We decided to use a single large screen, 48cm by 38cm for maximum clarity and visual range. We have discovered that a single large screen is more effective than several small screens. We can switch between our two camera views through a camera video feed splitter.

Figure 8: Control Station
Photo credit : Gabi Ashford

We have two pilots controlling the ROV thrusters. One pilot is in charge of decent and ascent of the ROV, while the other controls the ROV's direction. This method requires precise communication between pilots but we have found it is more successful than one pilot doing everything. Because of the large screen, it is easy for both pilots to see the video feed. This and many hours of practice in tandem, has trained our pilots to be adept at communication and fluidly operating the ROV.

3.6 Cameras:

The S.S. Dragon has two cameras. The main forward facing camera used to view the manipulator and observe the missions, is mounted on a servo inside the electronics canister. The secondary camera, mounted at the rear of the S.S. Dragon, encased in a separate waterproof canister is a reverse facing backup camera for cars, which we use to see if the S.S. Dragons' tether is tangled, snagged or caught upon anything.

Our front servo is there to be able to tilt up and down 70 to 80 degrees in both directions, which is a new and exciting improvement to the S.S. Dragon. It makes it so we can see straight ahead, look down at the manipulator, and any other tools we might have above, below, or in front of the camera.

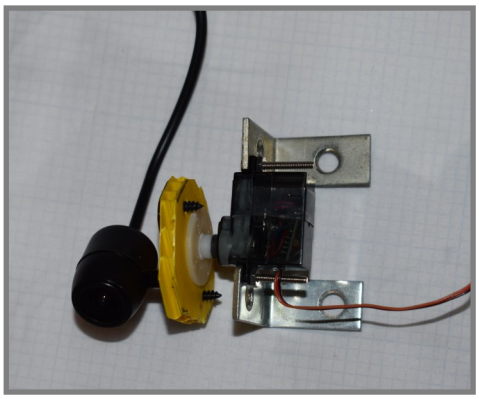

Figure 9: Front servo/camera
Photo Credit: Ella Ashford

The rear facing camera is mounted inside a separate canister, a design feature developed in previous years. Our original custom design for the reverse facing camera housing consists of; 1 inch PVC tubing, a GoPro protective lens, Mister STICKEYS Underwater Epoxy, p-4 regular bodied cement, an E-SKY backup car camera, duct tape and a few small plastic parts, but there are still some improvements to make. Our team likes to build our own parts more than we like to buy them, so therefore we decided to build our own camera housing. But we did have some failed attempts at building a housing before we finally managed a functional product. The first prototype we made was small and effective, we cut the cable to the camera to maximize space. After initial testing we discovered that the camera didn't work. We pushed through and tried different prototypes until we were satisfied with the finished product. However, we will be making a few final modifications to the camera housing.

We will be exploring making a housing out of clear 2 inch acrylic tubing instead of white 1 inch PVC tubing. This would increase the width instead of the length, and give us more room to work, as well increasing the visibility inside the housing. We will also be using a dome acrylic lens instead of the flat GoPro lens, effectively strengthening the housing as well as widening the field of view. The cables from the two cameras and the servo follow the tether leading from the S.S. Dragon up to the surface, where the two camera cables plug into a four way video RCA switch selector, which we use to switch between cameras, this switch plugs into our monitor which allows us to change the color, the contrast, and brightness as well as zoom in and out of the image emitted by the camera. The servo plugs into an RC receiver, which is controlled by a remote in the control box.

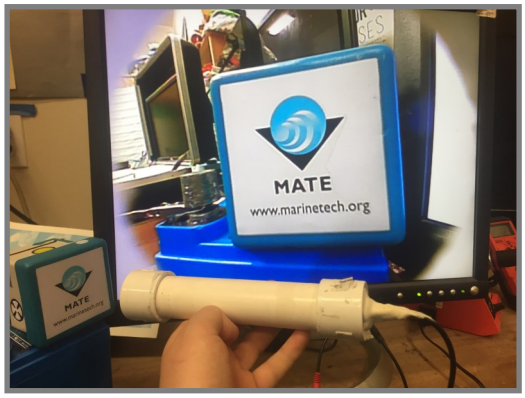

Figure 10: Camera/Monitor Tests
Photo Credit: Ella Ashford

3.7 Manipulator:

We started our MATE season with another goal, that is trying to step away from a LEGO based manipulator. One of our company members conducted an engineering project, applying engineering process to determine the best possible manipulator design. The original design goal was to build a pneumatic manipulator that had two degrees of motion, one for grabbing objects, and another for rotating the gripper. We experimented with commercial pneumatics, a hacked tire compactor and syringes. Later in the design process, we discovered that a three pronged manipulator could grab at almost any angle. This eliminated the need for a rotating claw. We 3D printed claw components and made multiple prototypes, all tested for strength and reliability. We discovered that all our new prototypes were not as efficient as our existing LEGO manipulator (originally designed in 2017). As a result we decided to modify our earlier LEGO manipulator to fit this year's tasks. In our previous design, we used duct tape and zip ties to secure our manipulator to the ROV. We worked this season to create a solid mounting system that would prevent misalignment. We also discovered after testing syringe size, that 100mL syringes require less force activating the manipulator at 6 meters or deeper.

When working with hydraulic systems it is of course important to remove all air from the line. We discovered that an automobile vacuum pump was effective in removing air bubbles. Including all components our manipulator's market value is $36.00. We learned that it is important to be able to recognize when a design is not working, and have a good backup plan.

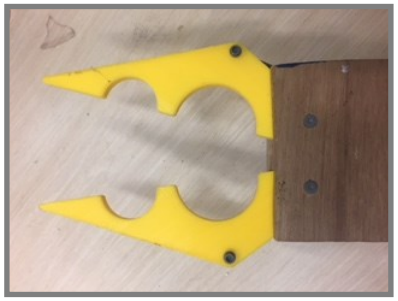

Figure 11:Prototype 1 - Failed
Photo Credit: Ella Ashford

Figure 12:Prototype 2 - Failed
Photo Credit: Ella Ashford

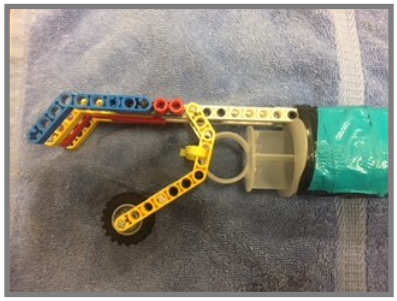

Figure 13: Current Manipulator
Photo Credit: Ella Ashford

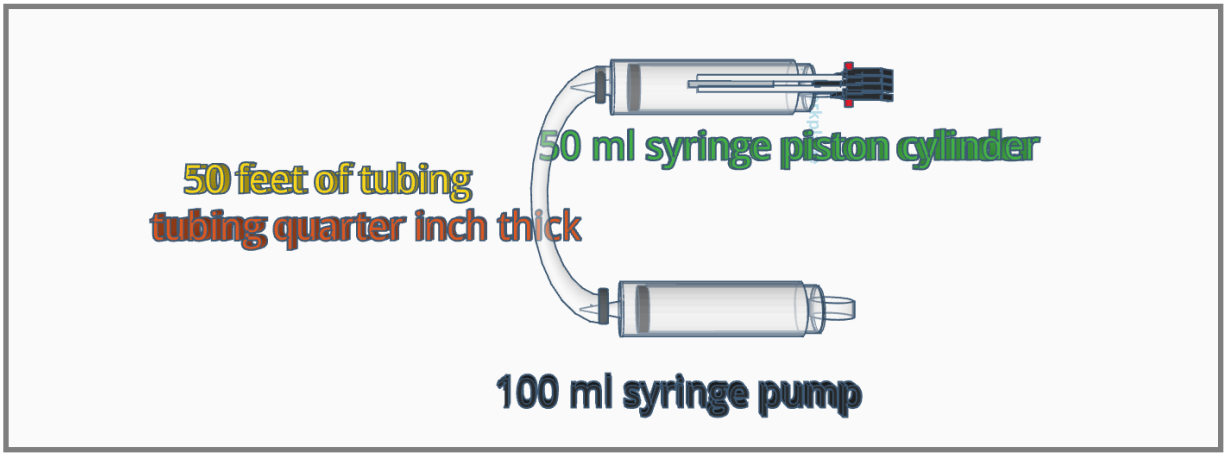

Figure 14: Early Prototype CAD Model - Designed by Ayden Ratliff

3.8 ROV Tools:

Figure 15:Prototype 1
Photo Credit: Gabi Ashford

Our ROV uses and deploys two main tools, a lift bag and OBS (Ocean Bottom Seismometer). Initially, the team designed several models for a lift bag, using an old weather balloon pumped up with air through a hose attached to a bike pump. We went through several designs and realized that it needed to be less stretchy and sturdier than readily available types of balloons. We also needed a way to release air from one of the bags, to set the debris down to the ocean bottom once we had lifted it off a plane wreck. The lift bag was then redesigned using a one way valve to release the air. The one way valve is glued with rubber and epoxy to a waterproof gear bag. The new lift bag system uses both a one way valve and vacuum pump to remove air.

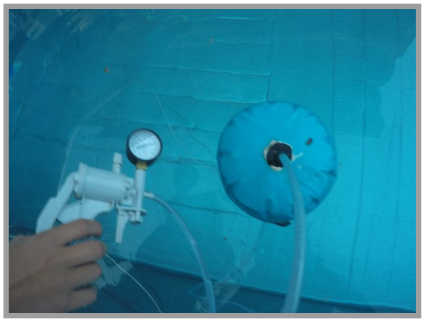

Figure 16:Prototype 2
Photo Credit: Nathaniel Ashford

Improvements to the lift bag system will be to insert a one way valve into the air line so that water does not enter the air pump system. Other improvements would be to make the whole system look more professional and to speed up the deployment time. We would also like to create a table determining the air volume needed to successfully lift the debris at different depths. With a table, we could better control the airbag as it carries the debris.

The ocean bottom seismometer (OBS) was our second ROV tool. The OBS system incorporates a weight to hold the system on the seafloor, a float to bring the sensor to the surface, and finally a release mechanism. We have two methods of release, our main release uses an electromagnetic signal to trigger release. Our backup method is a magnetic reed switch that closes the circuit and triggers the release. Both systems are connected to a relay which is a magnetic switch. Once one of the sensors is activated, it closes the circuit and powers a pump motor. The pump motor spins very fast and we needed a way to control the speed. We discovered that a LEGO linear actuator can gear down this thruster, while triggering a release. Once the LEGO release is triggered the now positively buoyant OBS floats to the surface for collection. All electronics are housed in a Blue Robotics 2” Series Watertight Enclosure. Because this enclosure is not latched together it will pop open in an emergency, usually gases from the battery onboard reaching an unmanageable level. This is a safety feature that prevents our OBS from becoming dangerous under pressure.

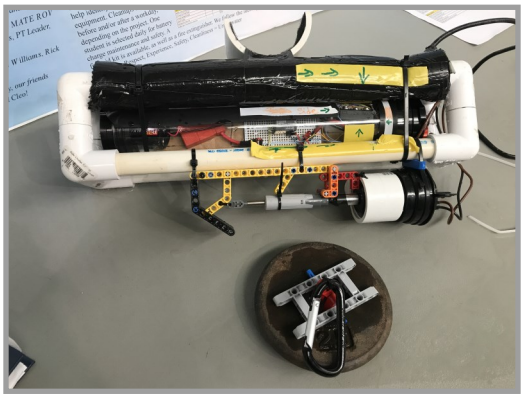

Figure 17: OBS
Photo Credit: Gabi Ashford

4. Design Choices (Build vs. Buy / New vs. Reused)

This year we used many commercial products to build our systems. But we pride ourselves in using these commercial products in new and innovative ways. We also work hard to reuse parts or components to reduce our economic impact. Many of our reused components are salvaged from other projects, or bought second hand. Listed below are some of the design choices we had to make to ensure reliability and efficiency of our ROV.

4.1 Control Case:

Control Box (Reused, Commercial, Modified)

Our current control box is a modified luggage case that was donated to our team. Although this reused case was commercially built we modified it to suit an ROV control station. This modified case now includes plywood and padded layers with custom inserts for electronics. We also attached monitor and joystick mounts so that the system would be as compact and durable as possible during both travel and deployment.

Joysticks (Reused, Commercial)

The potentiometers (joysticks) used in our control station were originally purchased by the team in 2017, to compete in the MATE Pacific Northwest Underwater Robotics Navigator Level Competition. We wanted to buy dependable controllers because of our inexperience. It was important to learn the basics of ROV control while having well documented products.

Monitor (Reused, Commercial)

Our video screen was a reused color computer monitor, bought second hand in 2017. We feel that it is important to “Reduce, Reuse and Recycle”.

Camera Feed Splitter (New, Commercial)

This was the first year we challenged ourselves to have multiple cameras on our ROV. Adding multiple camera views was an exciting step. We only have one monitor so we needed a way to switch between video feeds. After initial research we settled on an $11 camera feed splitter.

4.2 Onboard Electronics:

Blue Robotics T-100 Thrusters (3 Reused, 3 New, Commercial)

It is important to have a strong propulsion system for our when navigating the Puget Sound. Because of real applications, we made the decision to purchase three more T-100 thrusters from Blue Robotics. Though an expensive decision with thrusters valued at $120, plus $25 for ESC controllers, it is essential to our team's success. The ability to navigate accurately and quickly is also critical in this year's product demonstration.

Blue Robotics Speed Controllers (6 New, Commercial)

Although we had three reused ESC controllers, we accidentally cut our wires while re-opening the sealed canister. This forced us to purchase six new ESCs. We have found that it is important to take it slow when learning new techniques, and also to always have a couple of spare parts. These ESCs are easy to work with, and critical to our system design.

Blue Robotics Watertight Enclosure (New, Commercial)

In the past we have manufactured our own canisters, but the drawback to our technique was that once sealed, the canister could not be re-opened. Because we were working on real world applications, we wanted to be able to modify our electrical system for different applications, and this lead to the decision to purchase the Blue Robotics Watertight Enclosure 4" Series.

Arduino Uno (Reused, Commercial)

Our Arduino Uno is an essential part of our onboard electronics. Without a reliable microcontroller we would not be able to convert analog signals to PWM. This made the decision easy, to reuse our Arduino Uno.

Front Facing Curb Warning Camera (Reused, Commercial, Modified)

The front facing curb warning cameras and rear facing systems are modified to be a custom fit. The cameras are not waterproof and on one of our systems, we created a sealed canister that houses this system. On our other camera we needed a specific mounting system inside our watertight canister. We purchased one extra camera, and working with NOAA, made a video designed to teach Navigator students how to build an enclosed system like ours. This video is available at NOAA.

4.3 Frame Components:

Plywood (Reused, Custom Frame)

We were given scrap marine grade plywood to build our ROV frame. It was important that this wood was of high quality so it would not absorb water. We used ¼ inch (6 mm) plywood,

4.4 Manipulator:

Syringes (New, Commercial, Modified)

We needed to buy new 100 mL syringes for our hydraulic system. Our reused syringes had experienced the stressors of the 2017 season, and all the tests of the 2018 season, and finally malfunctioned. This indicates that it is equipment that this equipment should be renewed annually.

Hydraulic Tubing (New, Commercial)

We needed 14 meters of hydraulic tubing to run the length of our tether. We needed to buy this commercially to assure the quality of the product. If the hydraulic tubing even has small nicks, or age related cracks in the tube it cannot be used. We purchased our tubing from our local hardware store.

LEGO Technic Components (Reused, Commercial, Modified)

We use LEGO Technic components on our ROV manipulator. Although these parts are commercial they are easily modified to suit an ROV gripper. It is important to be able to take a step away from complex problems, and we have found that our team thrives in an environment where solutions can be found simply by playing with toys designed to explore engineering.

4.5 ROV Tools:

Air Hose and Adaptors (Reused Commercial)

We reused a commercial air hose adaptor to securely attach the air hose to the lift bag.

Dry Bag (New, Commercial, Modified)

We bought a new dry bag to replace the balloons we were using to lift the debris. The dry bag does not stretch, is more durable than a balloon, with taped stitching that holds air pressure under water.

Blue Robotics Watertight Enclosure 2” Series (New, Commercial)

We bought a watertight enclosure to use with our OBS system. We needed to have a waterproof canister that could come apart if pressure reached a certain threshold. This was needed to meet OBS safety requirements.

Sensors for OBS (New, Commercial, Modified)

We bought a magnetic reed switch and car key FOB that we modified to trigger the OBS when activated. We bought these items commercially and fully modified them to fit our needs.

5. SID

System Interconnection Diagram

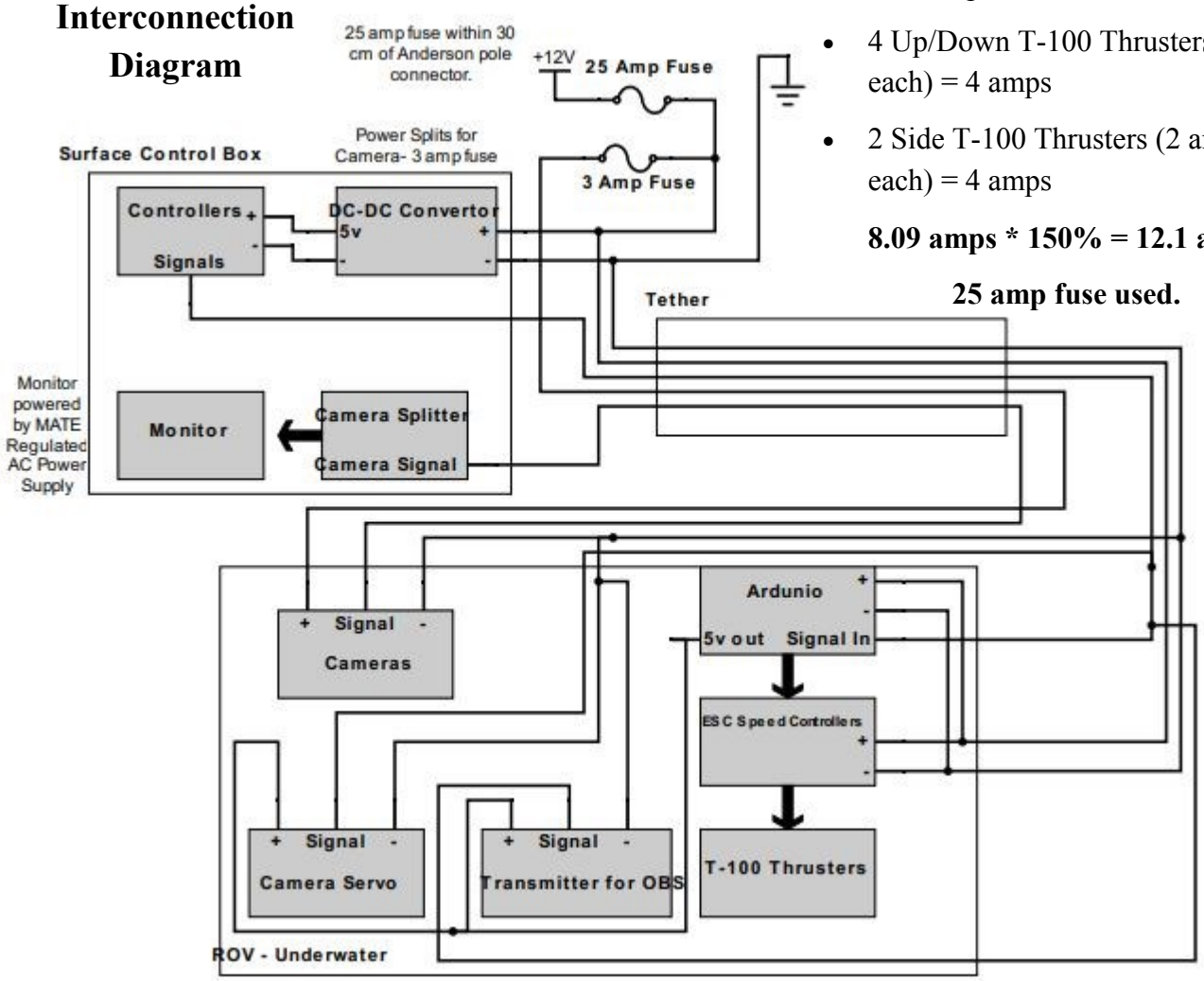

ROV Overcurrent Calculations

- 3 Camera Systems (.03 amps each) = .09amps
- 4 Up/Down T-100 Thrusters (1 amp each) = 4 amps
- 2 Side T-100 Thrusters (2 amps each) = 4 amps

8.09 amps * 150% = 12.1 amps

25 amp fuse used.

Fluid Power Diagram

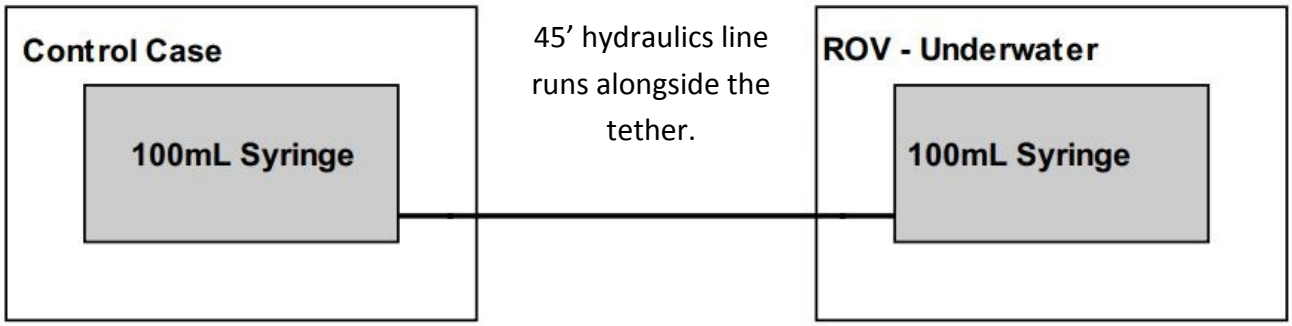

6. Safety and Philosophy :

Safety is the most important component of our company. Without good safety practices it is impossible to work in a productive environment towards innovative solutions. Safety is always the first priority and serves as the backbone of our company. Our company's philosophy is summarized with our acronym RESCUE which stands for Respect, Experience, Safety, Cleanliness = Underwater Exploration! Our acronym serves as an important reminder that to have a productive company all the following RESCUE criteria must be met.

Respect: When creating a functional company it is important to remember that all members have different strengths and weaknesses. Respecting all members, mentors and sponsors, and having the courtesy to acknowledge differing opinions, is of paramount importance to us.

Experience: The experience we gain while preparing for and competing in the MATE competition is invaluable. It is critical to always be open to learning a new skill or doing a task in a new way. The MATE experience should be a positive pathway for all members.

Safety: Safety is the backbone of our company. Always adhere to the safety agreements, safety checklists and JSA (Jobsite Safety Analysis). Never take shortcuts when designing the ROV, and take steps to premeditate safety violations and hazards.

Cleanliness: A clean workstation is very important when working in a shop environment. Your personal appearance should also be tidy including close toed shoes, no loose clothing and hair tied back when working with tools. The company should be presentable at all times and represent the values of MATE.

Underwater **E**xploration: Explore engineering and science concepts through the MATE ROV Competition. MATE allows us to have the opportunity to learn through hands on experience while making a difference in our community. HAVE FUN!

Figure 18: Having fun at PNW MATE Regional!
Photo Credit: Ella Ashford

HIGHLIGHTS OF ROV SAFETY FEATURES

It is important to consider ROV safety features when designing and building the ROV. Listed below are our highlighted company safety features.

- **Fuse:** A 25 amp fuse within 30 cm of the Anderson power pole protects the circuit from electrical mishap. It is important to these mathematical equations to calculate the overcurrent protection: *ROV Overcurrent Protection = ROV Full Load Current * 150 %.*

HIGHLIGHTS OF ROV SAFETY FEATURES

- **Thruster Shrouds and Guards:** Custom guards designed by CAD modeling to keep fingers safe.
- **Strain Relief:** Adequate strain relief is provided at the ROV and on the surface at the control station. This prevents wires from breakage or the canister endcap being pulled off.
- **Waterproofing:** Having watertight enclosures is critical on an ROV, nothing would work without it. We use silicon greased O-rings on a flange to seal a watertight canister that houses electronics.
- **ROV Safety Handholds:** When designing the ROV we wanted to give our tether manager safe options to grab the ROV. After several design prototypes we integrated handholds into our ROV frame. This way the tether manager is safe when removing the ROV from the water, and so is the ROV!
- **Safety Transport Cart:** Our company recognized that our ROV and control station were heavy and difficult to carry over long distances. To solve this problem and improve our company's organization we built an ROV transport cart. This cart enabled us to transport our ROV in an organized fashion without the worry of straining company members. Our cart comes equipped with a safety station, ROV housing and control box housing. Perfect for transporting the ROV to test sites around the Puget Sound, to product demonstrations and engineering presentations.

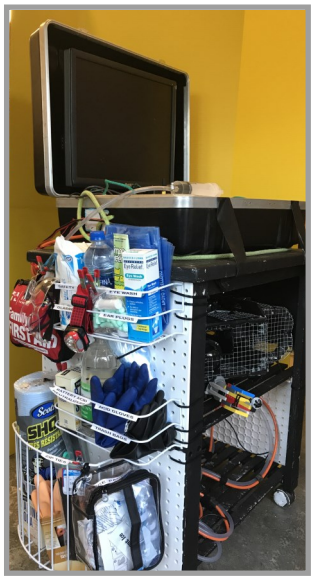

Figure 19: ROV Transport Cart
Photo Credit: Ella Ashford

- **Safety Protocol Checklist:** It is easy to make mistakes while operating under pressure. A checklist is a critical tool to avoid human error. Sea Dragon Safety Checklist:

Safety Logistics	Pass	Fail	Specialist	Action needed	Pass
System Integration Diagram			Ella		
Hydraulics System Diagram			Ayden		
Company Safety Agreement			Everest		
Sea Dragon ROV Transportation Cart			Ella		
Safety Hardware					
Systems securely attached			Nathaniel		
Propellors inside frame			Nathaniel		
Propellers shielded per ruling			Nathaniel		
No sharp objects damage pool or person			Nathaniel		
OBS safety			Logan		
Wires secured and away from moving parts			Ella		
Safety Tether					
Tether secure both ends			Nathaniel		
25 amp in line fuse			Ella		
3 amp camera fuse			Ella		
Spare fuses			Ella		
Hydraulics line secure			Ayden		
Anderson connectors secure			Ella		

7. Critical Analysis :

7.1 Testing

Cameras: The video system is one of the most important parts of an ROV. Without it one is blind to surrounding conditions and helpless in a harsh environment. But small flaws in camera casings can cause small leaks that can cause fog inside a casing, and even camera failure. Because some of the cameras housed on the ROV are in independent canisters that cannot be opened, each system was thoroughly tested before installation. Each front facing wide angle curb warning camera was tested upon arrival from the manufacturer, to rule out and eliminate manufacturing error. The camera was then sealed inside the waterproof container and tested again above water. Basic waterproof testing was conducted in a 1.5 meter deep pool for a 24 hour period. Once a water proof seal was established at 1.5 meters, the camera systems underwent extensive pressure testing at a 1.5 meter depth, a 4.5 meter depth and finally at a 7.5 meter depth. After completing testing the camera could be installed on the ROV.

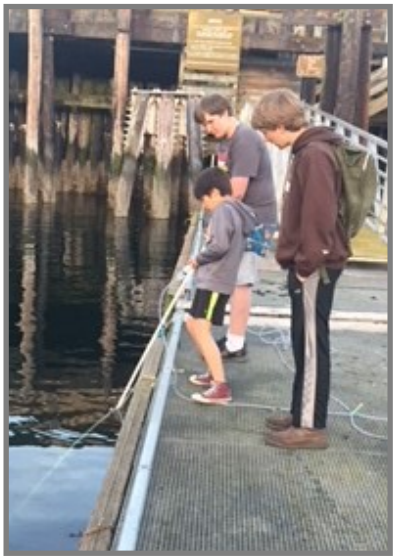

Figure 20: Camera Depth Tests
Photo Credit: Ella Ashford

Flotation and ballast: After initial buoyancy calculations were made, the ROV was tested for continuous buoyancy. Because of the decision to use closed cell foam blocks for flotation, and metal rebar for ballast, buoyancy was easy to adjust. Neutral buoyancy was tested at 1.5 meters, 4.5 meters and finally 7.5 meters. This testing assured that water pressure was not compressing the foam and altering our floatation calculations.

7.2 Troubleshooting:

Troubleshooting was a very important part of this year's ROV testing. We learned a lot of new techniques with hardware and software this year. Our inexperience lead to various technical failures that were difficult to trace. It was important that we knew the system inside and out and could quickly identify the problem during deployment in high stress situations. A physical checklist helped in situations like these. Listed below are some of the common problems we faced, and our solutions to quickly identify the source of the complication.

Electrical – System not turning on

- Check battery connection and Anderson poles
- Make sure fuse did not blow
- Check positive and ground connections
- Confirm there are no electrical shorts in the system

Electrical – Thrusters spinning out of control:

- Check the voltage reference wire
- Check signal input and output wires
- Use oscilloscope to check for noise in the system

Software and Electrical – Thrusters not responding to joystick signals

- Start by checking positive and ground connections throughout the system and be sure that there are no electrical shorts
- Check potentiometers for broken connections or bad solder joints
- Check Arduino signal inputs and outputs to be sure the connections are right
- Verify computer program to check for errors
- Analyze computer program for mistakes

7.3 Technical Challenges:

Our biggest technical challenge was an extreme case of working under pressure with limited available resources to come up with innovative solutions. At the beginning of the season we created a list of priorities that we wanted to accomplish before our competition, organized by relative importance to the company. In this way we could streamline our design process. The Ocean Bottom Seismometer (OBS) was a low priority on this list although an important one. Therefore we took the time to create the OBS documentation although the OBS was not yet completed. The day before our regional competition we had finally solved a major programming and electrical problem on the ROV and were able to start on the OBS. We pulled together all members of the company to work on the project based on their specialties. We were able to design the OBS structure and the reed switch electronics portion, but the release mechanism was difficult to design and all the tests failed. From complex pulley systems to pin releases, the designs were either not robust enough for diver transport or, alternately, did not provide a reliable release. Sometimes innovation comes after a good night of sleep and the day of competition we simplified from complex mechanical designs to a LEGO release mechanism. This “MacGyver” solution made of children’s toys worked reliably and on the first test in the water. We learned how to quickly troubleshoot as a team, how to use available resources to build a reliable device, and the value of never giving up.

Another technical challenge the team faced was noise interfering with the Blue Robotics T-100 thrusters. At first we were not able to identify the problem using a multi-meter. We researched the problem on electrical forums and analyzed the T-100 technical documentation. We were only able to successfully identify the noise problem by learning to use an oscilloscope to measure and visualize the PWM (Pulse Width Modulation) signal. After we identified the problem we used capacitors on the signal line and turned down the PWM signal on the thrusters. This successfully fixed the noise problem in the system.

7.4 Non-Technical Challenges:

Age Difference: We have members within our company from fifth grade to eleventh grade. This broad age difference leads to a unique set of strengths and challenges. At the beginning of the MATE season we worked long days with few breaks, a lot was expected of our younger team members. We quickly had to re-evaluate our team environment to make it a positive experience for all students. Something we learned to recognize in our company, is that our younger teammates have shorter attention spans and need more breaks. To work together cohesively, we set generous break schedules and played games so that all members could feel that they contributed no matter their age or developmental skills.

7.5 Technical Lessons Learned:

Measure twice cut once: a common saying in the engineering world, but it sure is the truth! It is important to know what material you are cutting, how it will react to modification, if the equipment you are using is right, and to be sure all your measurements are correct. When cutting open a sealed PVC electrical canister one company member did not confirm the thickness of the canister, which resulted in damaging the electronics housed inside. Though this is a harsh lesson, this confirmed that when operating power tools, it is always important to know all the details about your materials and project.

Electrical Polarity: During prototyping of electrical systems, it is always important to keep wires neatly labeled and your workstation tidy. When working on complex systems we also learned that it is important to take a break before getting frustrated or tired. On one long day of electrical troubleshooting and multiple system failures one company member was frustrated and working quickly and sloppily. This lead to a rash decision to bypass the fuse and Anderson pole connectors which were in need of repair. Because of a mislabeled wire this caused an electrical short that fried multiple electrical components. We learned that it is essential to take complex problems slowly, take breaks when frustrated, and ask for help when it is needed.

7.6 Non-Technical Lessons Learned:

Grit: Learning to persevere in the face of failure is a tough lesson to learn but essential to the MATE competition learning process. When experiencing electrical mishaps or team disagreements, it is critical to first separate yourself from the problem and be willing to look at it as an opportunity to learn. As a cohesive group we learned to evaluate what went wrong and how we might fix the problem in the future.

8. Development of Skills:

Our company has a knowledge base that applies to the MATE experience and this year's theme Jet City: Aircrafts, Earthquakes and Energy. Every company member has participates on STEM competition teams throughout the year which helps build technical skills and cooperation skills. This was an essential part of our company's success this year. Each skill a company member learns, directly apply to the MATE Competition. Here are some of the skills that we have gained due to our experiences.

- Most members on the team participated in the ***Washington State Science and Engineering Fair*** where they learned to conduct individual scientific or engineering projects. One team member focused on using scientific process to test and build a magnetometer that could discover undersea wrecks. Another one of our students used engineering process to determine the best shape and design for an ROV manipulator. This projects directly applied to this year's challenge and helped build skills necessary to compete.
- All company members have participated in hands on learning through ROVs. Some first learned about engineering design process and undersea driving through a ROV summer camp while other on the team participated in the 2017 MATE navigator class challenge. Because of these events, the team had previous knowledge of ROV systems and had experienced the MATE competition.
- Our company members have all participated in the FIRST Robotics competitions as teammates. Because of this STEM culture, we have been able to grow in our community. We have multiple years of experience working together. This was a huge benefit to the team because we already knew each other's strengths and weaknesses. We had experience working on a team together so we were a very collaborative group because we were comfortable with each other. Teamwork is one of the most important parts of a successful company.
- When starting our research on this year's theme, we knew we would need to step up our game! To do this we needed to learn new skills to complete the goals we had set forward. Every member of the team benefited from individualized learning through partnerships with mentors, fieldtrips and workshops. Members learned that learning new skills is difficult without teachers. Thanks to the support of our mentors we were able to conduct workshops so our team could learn how to use power tools, oscilloscopes and programming techniques. We discovered that day long workshops are a great way to learn new skills!

9. Future Improvements and Reflections:

The S.S. Dragon performed above and beyond initial expectations, but as with any long-term engineering project there is always room for improvements. The biggest improvement we would like to see applied to our future ROVs is to continue to step up the frame material. Through a local partnership we created this year, we would like to use recycled carbon fiber to rebuild our ROV to be lightweight and more durable. Plywood and PVC would still be the ideal prototyping material. Our company only has a five week build season due our participation in other competition events. It is essential that we work on more effective scheduling so that we can spend more time on the design process and still have time for timed practice runs for the product demonstration.

Ella Ashford: As the electrical and software engineer, I have a lot to learn about integrating my systems. In the future I would like to find a more effective way to filter noise out of my electrical system. This may involve designing and building a more efficient tether. Because of noise in the system we were not able to make our thrusters as powerful as we would have liked. This influenced the amount of points we could earn in the product demonstration. As CEO I feel a responsibility to also improve our financial management. Thanks to the support of our generous community and local supporters we were able fundraise enough to participate in this year's challenge. But in the future we need to solicit high priority sponsors that can continue to support STEM programs in our community for years to come.

Logan Flanagan: As the tools expert, I would like to see the ROV go faster and have more power in it's manipulator to be able to perform the missions better.

Nathaniel Ashford: As the mechanical engineer I would like to have access to more advanced machinery like a laser cutter, a 3D printer or even a CNC router. This would allow us to manufacture a more advanced frame and better mounting systems. We were limited in the extent of custom components we could integrate into our ROV. As the pilot I think we need a more sophisticated control box so that we can integrate more sensors into the system.

Everest Ashford: As the tether manager, I would like to develop a better way to deploy the tether system and learn about pool chemistry so that we can dive in and reset the missions in our ROV tank!

Ayden Ratliff: As the hydraulic engineer, I would like to explore onboard hydraulics and pneumatics, and I look forward to stepping up to the next level and studying for the power fluid test next year.

10. Accounting

Our budget for running our company is $2,000. Attached is a breakout of company operating costs and our ROV expenses.

Category	Cost Paid (USD)	Part Status	Fair Market Value (USD)
Frame/Buoyancy	**$0.00**		**$50.00**
Acume Marine Plywood	$0.00	Donated	$25.00
L-brackets and Hardware	$0.00	Donated	$5.00
Paint	$0.00	Reused	$5.00
Painting Supplies	$0.00	Reused	$5.00
Closed Cell Foam	$0.00	Reused	$5.00
Rod Stock	$0.00	Reused	$5.00
Electronics	**$620.00**		**$735.00**
Joysticks	$20.00	New	$60.00
12 to 5 Volt Converter	$0.00	Donated	$10.00
Electronics Bus Bars	$0.00	Reused	$20.00
Wiring	$0.00	Reused	$20.00
4" Watertight Enclosure	$200.00	New	$200.00
Penetrators	$60.00	New	$60.00
Epoxy Supplies	$20.00	New	$20.00
Connectors	$20.00	New	$20.00
2 Batteries	$260.00	New	$260.00
Arduino Uno	$0.00	Reused	$20.00
Breadboard	$0.00	Reused	$5.00
Capacitors	$10.00	New	$10.00
Fuse and Fuse Holders	$10.00	New	$10.00
Anderson Connectors	$10.00	New	$10.00
Hardware Case	$10.00	Reused	$10.00
Thrusters	**$516.00**		**$926.00**
6 T100 Thrusters	$360.00	New	$720.00
6 T100 Thruster ESC	$156.00	New	$156.00
Shrouding	$0.00	Donated	$50.00
Tether	**$10.00**		**$160.00**
Tether	$0.00	Donated	$150.00
Tether Strain Relief Hardware	$10.00	New	$10.00
Camera System	**$86.00**		**$86.00**
Reverse Facing Car Camera	$15.00	New	$15.00
Front Facing Car Camera	$15.00	New	$15.00
RCA Extension Cable	$15.00	New	$15.00
Video RCA Switch	$11.00	New	$11.00
2 Monitors	$30.00	New	$30.00
Hydraulic Manipulator	**$29.00**		**$36.00**
50' Hydraulic Tube	$25.00	New	$25.00
Syringes	$4.00	New	$4.00
Hose Clamps	$0.00	Reused	$1.00
Lego Technic Parts	$0.00	Reused	$5.00
Glue	$0.00	Donated	$1.00
ROV Tools	**$133.00**		**$259.00**
PVC	$0.00	Reused	$5.00
2" Watertight Enclosure	$107.00	New	$107.00
Pump Motor	$0.00	Reused	$99.00
LEGO Linear Actuator	$0.00	Reused	$12.00
Lego Parts	$0.00	Reused	$10.00
Electronic Connections	$5.00	New	$5.00
Car FOB Kit	$15.00	New	$15.00
Batteries	$1.00	New	$1.00
Breadboard	$5.00	New	$5.00
Company Operating Costs	**$315.00**		**$1,185.00**
Shipping	$300.00	Shipping Costs	$300.00
Pool Liner	$0.00	Donated	$120.00
Travel and Accommodations	$0.00	Donated	$160.00
Meals and Entertainment	$0.00	Donated	$450.00
ROV transport Cart	$15.00	Reused	$15.00
Cart First Aid Kit	$0.00	Donated	$50.00
Cart Tools	$0.00	Donated	$30.00
Cart PPE Kit	$0.00	Donated	$30.00
Cart Battery Safety	$0.00	Donated	$30.00
ROV Total	**$1,395.00**		**$2,252.00**
Company Overhead Total	**$1,710.00**		**$3,437.00**

11. References and Acknowledgments :

We completed extensive research on our ROV components before purchasing our products. We learned many new skills this year through our research that greatly contributed to our education and competition season. Here are the essential references used in our company:

- Blue Robotics (unknown) *Blue Robotics Forums*. Retrieved from https://discuss.bluerobotics.com/
- Blue Robotics (unknown) *T-100 Thruster Documentation.* Retrieved from http://docs.bluerobotics.com/thrusters/
- Blue Robotics (unknown) *Specifications: 4" Series.* Retrieved from http://docs.bluerobotics.com/watertight-enclosures/#specifications-4-series
- DigiKey (unknown) *Scheme-it – Schematic Drawing and Block Diagraming Made Easy.* Retrieved from https://www.digikey.com/en/resources/design-tools/schemeit
- Banzi, Massimo (2011) *Getting Started with Arduino 2nd Edition.* Sebastopol CA: O'Reilly Media
- Ratliff, Ayden. 1st place winner at WSSEF with *The Manipulator, A Second Year Project*. Personal Interview. 26st March. 2018.
- Moore, S. Bohm, H. & Jensen, V (2010) *Underwater Robotics Science Design & Fabrication*. Monterey CA: Marine Advanced Technology Education Center
- Oceaneering (2012) *Americas Region HSE Employee Handbook 2012.* Retrieved from: https://www.marinetech.org/files/marine/files/ROV%20Competition/2015%20files HSE_Handbook_number_3_As_of_11_19_2013_AW.pdf

The Sea Dragons would like to give a special thank you to our sponsors and supporters listed below!

Sea Dragons Sponsors: *PT STEM Club*, *Admiral Ship Supply, Port Townsend Les Schwab Tire Center, Applied Education Foundation, Pacific Northwest MATE ROV Competition, Solidworks, Port Townsend Henery Hardware, PT Computers, Canadian Underwater Conference and Exhibition, Quimper Mercantile Company, Port Townsend West Marine, WeHoP, John Downing, Betsy Blinks and AMW.*

Sea Dragons Supporters: *MATE Center, Pacific Northwest MATE ROV Competition, Port Townsend QFC Deli, NOAA, Blue Robotics, PT Leader, Betsy Blinks, Vera and Phil Williams.*

Sea Dragon Mentors: *John Downing, Otto Smith, Tom Williams, Rick Peregrino, Harry Bohm, Betsy Blinks, Gabriella Ashford and Eric Ashford.*

A big thank you to our community, our family, our friends and our canine mascots, Tussa and Cleo!